MẠCH KHUYẾCH ĐẠI CÔNG SUẤT ÂM THANH - AUDIO POWER AMPLIFIER

: Khuyếch đại công suất âm thanh 4W-8W dùng TDA2005

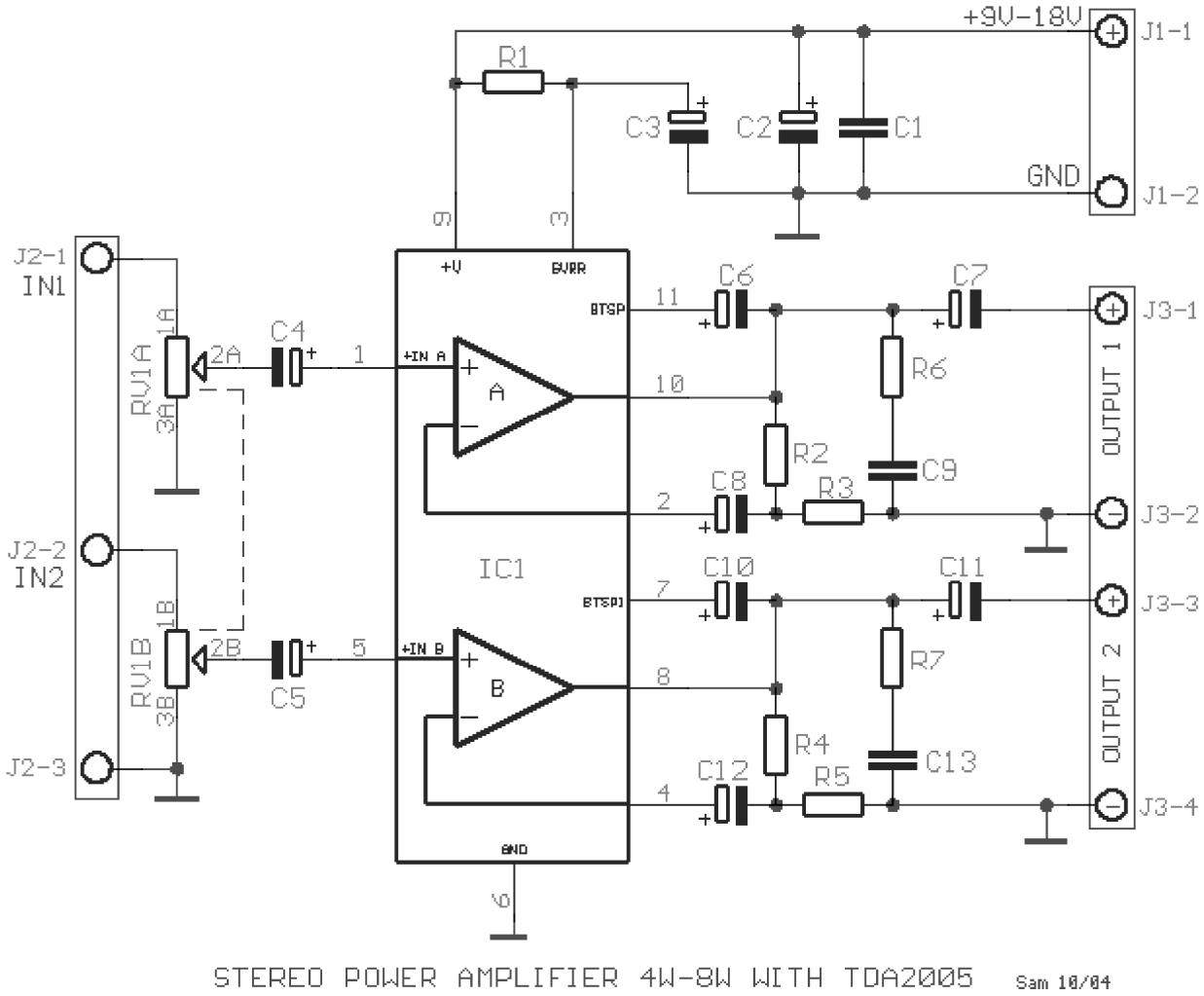

Power Supply	**9–18V at 1–2 A**	
	Power output	**>8 W RMS/ch. at 2ohm 16V DC supply.** **>6W RMS/ch.at 4ohm 16V DC supply** **>4W RMS/ch.at 4ohm 12V DC supply**
	THD	**<0.1% @ 1W, 4ohm** **0.018% at 1W RMS @ 4 ohm and +15V supply**
	Tần số	**~15 Hz to 50 kHz, –3 dB**

S/N ratio	>80 dBA.
Input level	~160 mV for full output
Gain	~31 dB maximum.

Linh kiện :

R1=120Kohm 1/2W 5%	C1-9-13=100nF 100V MKT	C7-11=2200uF 16V
R2-4=1.2Kohm 1/4W 5%	C2=220uF 25V	C8-12=220uF 25V
R3-5=33 ohm 1/4W 5%	C3=10uF 25V	IC1=TDA2005
R6-7=1 ohm 1/2W 5%	C4-5=2.2uF 25V	J1=2 Pole Terminal Block
RV1=2X10Kohm Log. Pot.	C6-10=100uF 25V	J2-3=3 Pole Terminal Block

: MKĐ âm thanh 60W dùng TDA7294

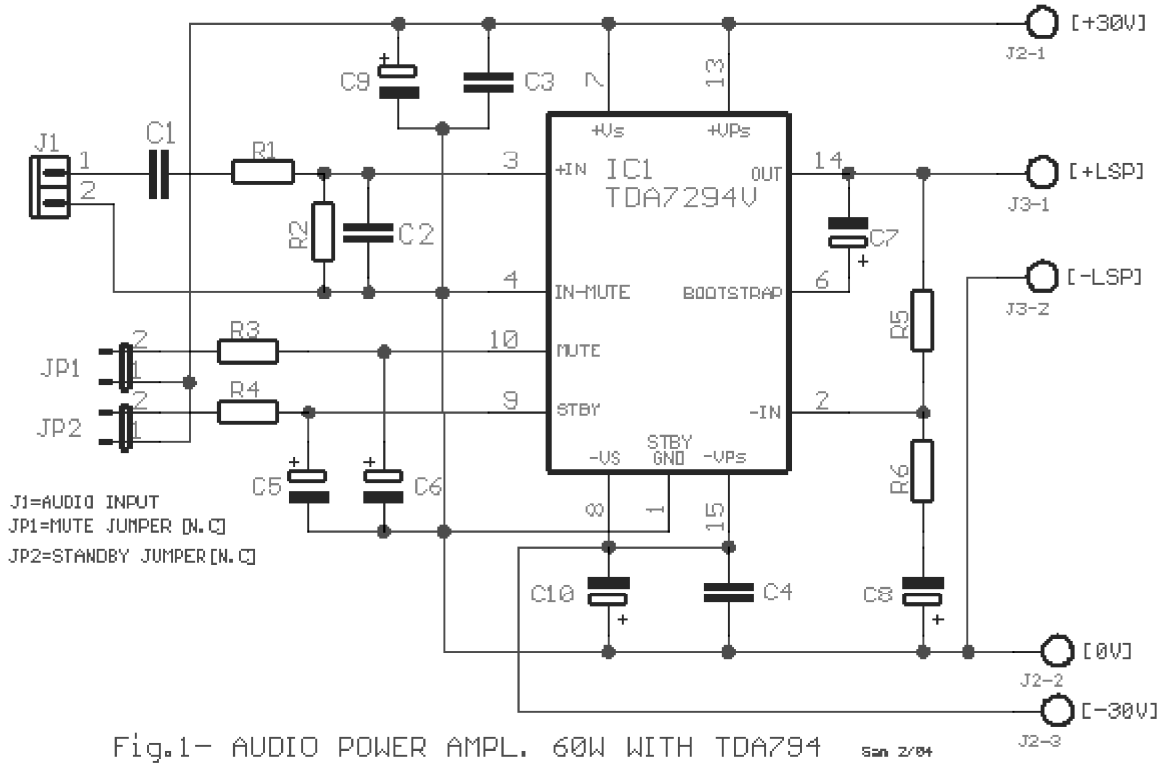

Input sensitivity	1.3V (50W into 8W)
Input impedance	10K
Frequency response	15Hz - 100kHz
Slew rate	10V/uS
Output power	50W into 8W (0.1% THD) 82W into 4W (0.1% THD)
S/N ratio	105dBa (1W / 8W)
THD (40W into 8W)	0.002% (1kHz) < 0.04% (20Hz - 20kHz)
Power Supply	+/-30Vdc

R1=180ohm	C5-6=10uF 63V	J2=3pin
R2-3-5=10Kohm	C7=22uF 63V	J3=2pin

R4=22Kohm	**C8=33uF 25V**	
R6=680ohm	**C9-10=1000uF 63V**	**All Resistors is 1/4W 1%**
C1=1.5uF 63V MKT	**IC1=TDA7294**	
C2=2.7nF 63V MKT	**J1=2pin connector with 2.54mm step**	
C3-4=100nF 100V MKT	**JP1-2=2pin Jumper with 2.54mm step**	

Sơ đồ nguồn cung cấp"

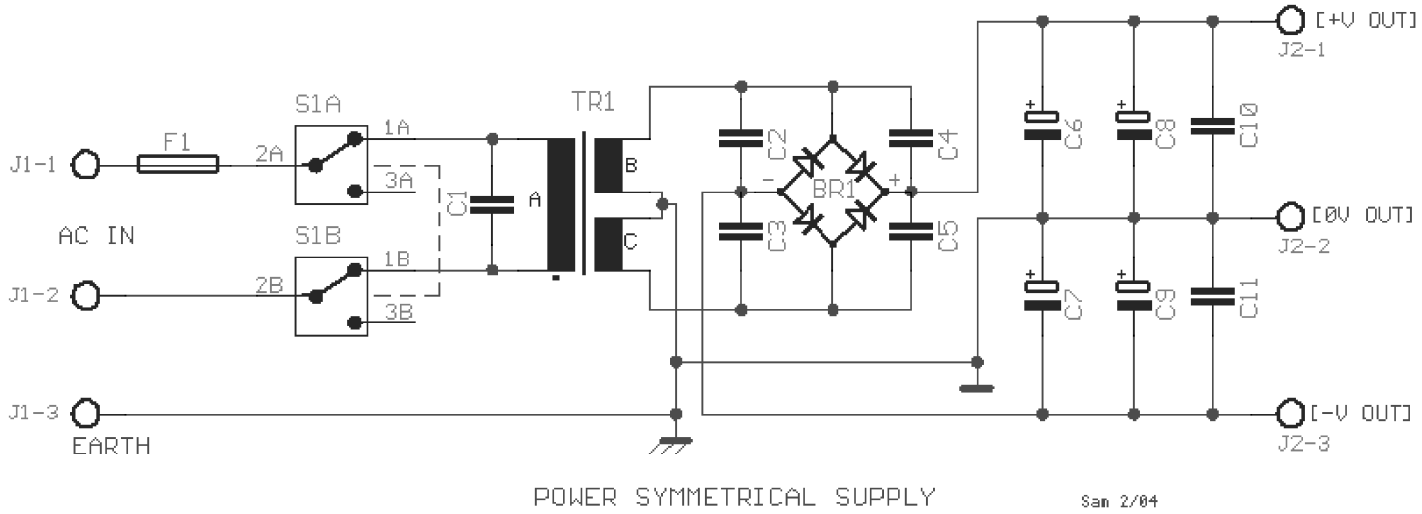

Linh kiện :

TR1=230Vac//2X22Vac	**80VA for single Amplifier**	**C1=22nF 630V Polyester MKT**	**C8-9=10.000uF 63V For dual Amplifier***
TR1=230Vac//2X22Vac	**150VA for dual Amplifier**	**C2....5=22nF 100V Polyester MKT**	**C10-11=1uF 63V**
BR1=Diode cầu >15A		**C6-7=10.000uF 63V For single Amplifier**	**F1=Fuse 0.5A slow**

: MKĐ âm thanh 50W

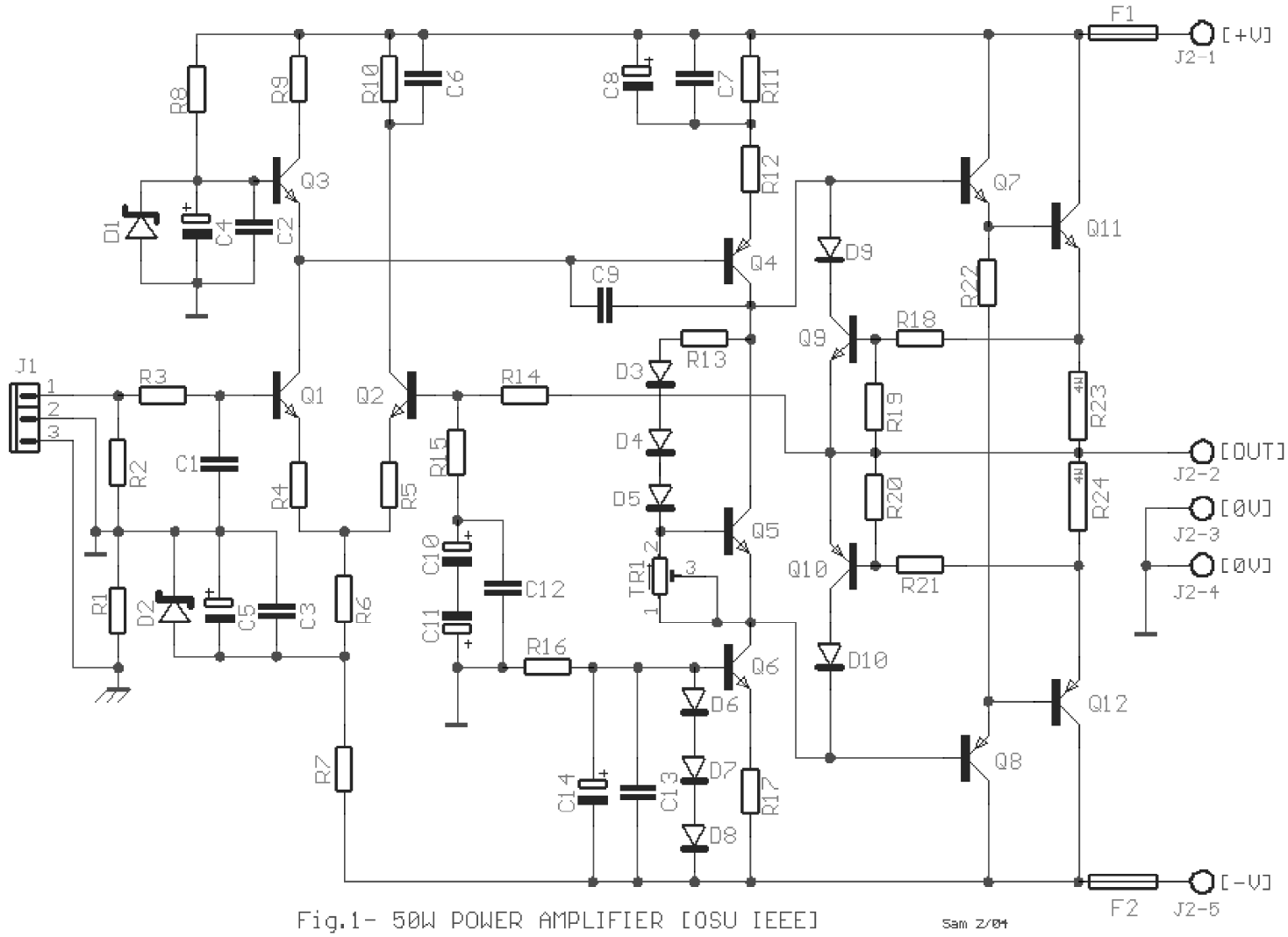

Fig.1- 50W POWER AMPLIFIER [OSU IEEE]

R1=4.7 ohm 1/4W	**R23-25=0.33 ohm / 4W**	**Q8=BD240C**
R2-16=47 Kohm 1/4W	**TR1=5 Kohm T**	**Q10=2N3906**
R3=10 Kohm 1/4W	**C1=330pF NPO Capacitor**	**Q11=BD249C**
R4-5=47 ohm 1/4W	**C2-3-6-7-12-13=100nF 100V MKT**	**Q12=BD250C**
R6=3.3 Kohm 1/4W	**C4-5-8-14=100uF 63V**	**D1-2=12V 0.5W ZENER**
R7-8=2.2 Kohm 0.5W	**C9=47pF NPO Capacitor**	**D3-4-5=1N4002**
R9-15=1 Kohm 1/4W	**C10-11=100uF 16V**	**D6-7-8-9-10=1N4148**
R10=6.8 Kohm 1/4W	**Q1-2-3=BC550C**	**J1=3pin connector with 2.54mm step**
R11-17=1.1 Kohm 1/4W	**Q4=MPSA56**	**J2=5pin connector with screws**
R12-18-19-20-21-22=220 ohm 1/4W	**Q5-9=2N3904**	**F1-2=Fuse2A Fast**
R13=330 ohm 1/4W	**Q6=MPSA06**	
R14=22 Kohm 1/4W	**Q7=BD239C**	

Mạch nguồn :

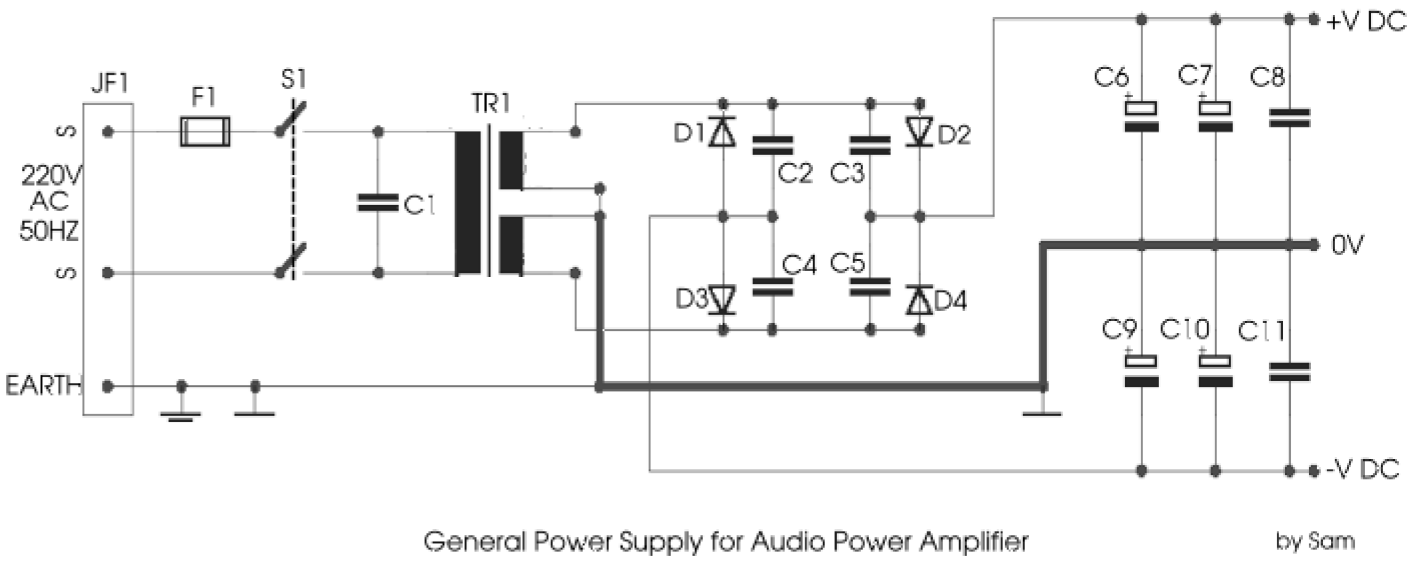

linh kiện:

TR1=220VAC/2X28V 6A	**C1=33nF 630V**	**C9-10=15000uF 63V**
F1=Fuse 1A Slow	**C2-3=22nF 100V MKT**	**C8-11=100nF 100V MKT**
S1=2X10A SW	**C4-5=22nF 100V MKT**	**D1-4= rectifier bridge 400V 35A**
JF1=3P Connector 3.96mm step	**C6-7=15000uF 63V**	

: AMP 30W

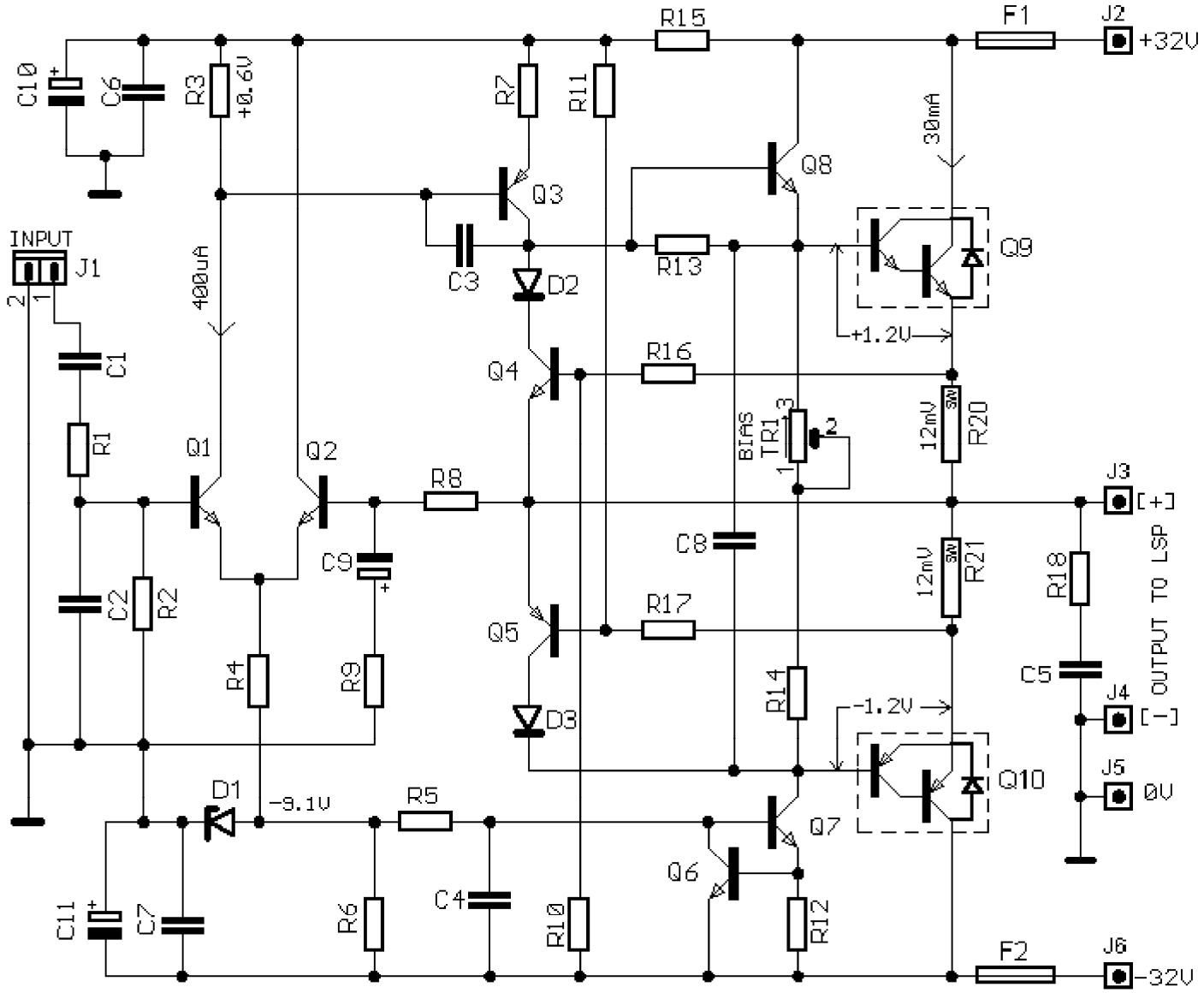

Fig.1--POWER AMPLFIER 30W Sam 8/02

R1=1Kohm	**R16-17=270ohm**	**D1=9.1V 0.4W zener**
R2=47Kohm	**R18=22ohm 1W**	**D2-3=1N4148**
R3=1.5Kohm	**R19=NC**	**Q1-2=BC550C**
R4-5=10Kohm	**R20-21=0.39ohm 4W**	**Q3=MPSA56**
R6=5.6Kohm	**TR1=250ohm trimmer**	**Q4=BC547B**
R7=10ohm	**C1=470nF 100V MKT**	**Q5=BC212**
R8=47Kohm	**C2=1nF 100V MKT**	**Q6=BC183**
R9=560ohm	**C3=68pF ceramic**	**Q7-8=MPSAO6**
R10-11=8.2Kohm	**C4-8=22nF 100V MKT**	**Q9=TIP141**
R12-15=120ohm	**C5-6-7=100nF 100V MKT**	**Q10=TIP146**
R13=680ohm	**C9=47uF 25V**	**F1-2=1.6AT FUSE**
R14=330ohm	**C10-11=220uF 63V**	

: Khuyếch đại công suất âm thanh 65W

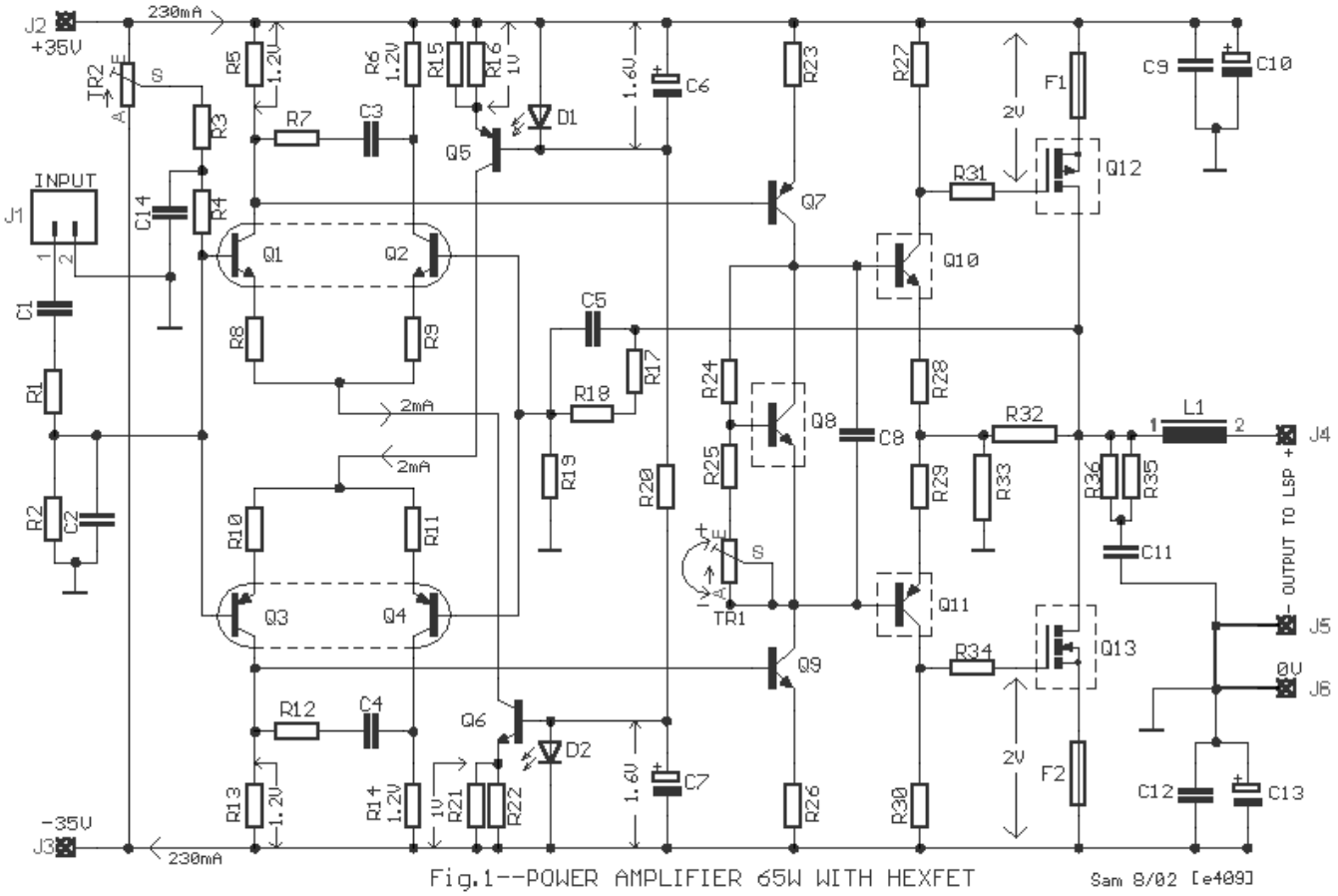

Tần số âm thanh là 1.5 đến 125Khz

R1-15-16-21-22-17-18=1Kohm	**R33=68ohm 5W**	**Q1-2=BC550C**
R2=47Kohm	**R35-36=6.8ohm 1W**	**Q3-4=BC560C**
R3-4=10Mohm	**TR1=1Kohm trimmer**	**Q5=BC560C**
R5-6-13-14=1.2Kohm	**TR2=1Mohm trimmer**	**Q6=BC550C**
R7-12=47ohm	**C1=2.2uF 63-100V MKT**	**Q7-11=BD140**
R8-9-10-11=22ohm	**C2=1nF 100V MKT**	**Q8-9-10=BD139**
R19=82ohm	**C3-4=2.7nF 100V MKT**	**Q12=IRF9540**
R20=22Kohm	**C5=330pF ceramic or mylar**	**Q13=IRF540**
R23-26=56ohm	**C6-7=100uF 16V**	**F1-2=Fuse 2.5A Fast**
R24=2.2Kohm	**C8=1uF 100V MKT**	**L1=see text [2]**
R25=560ohm	**C9-11-12=100nF 100V MKT**	**J1= 2pin connector 2.54mm step**
R27-30=150ohm	**C10-13=470uF 63V**	
R28-29-31-34=15ohm	**C14=33nF 100V MKT**	**Q8-10-11-12-13 on Heatsink**
R32=150ohm 5W	**D1-2=LED RED 3mm [see text] [1]**	**All the resistors is 1/4W 1% except quote differently**

Mạch nguồn cung cấp

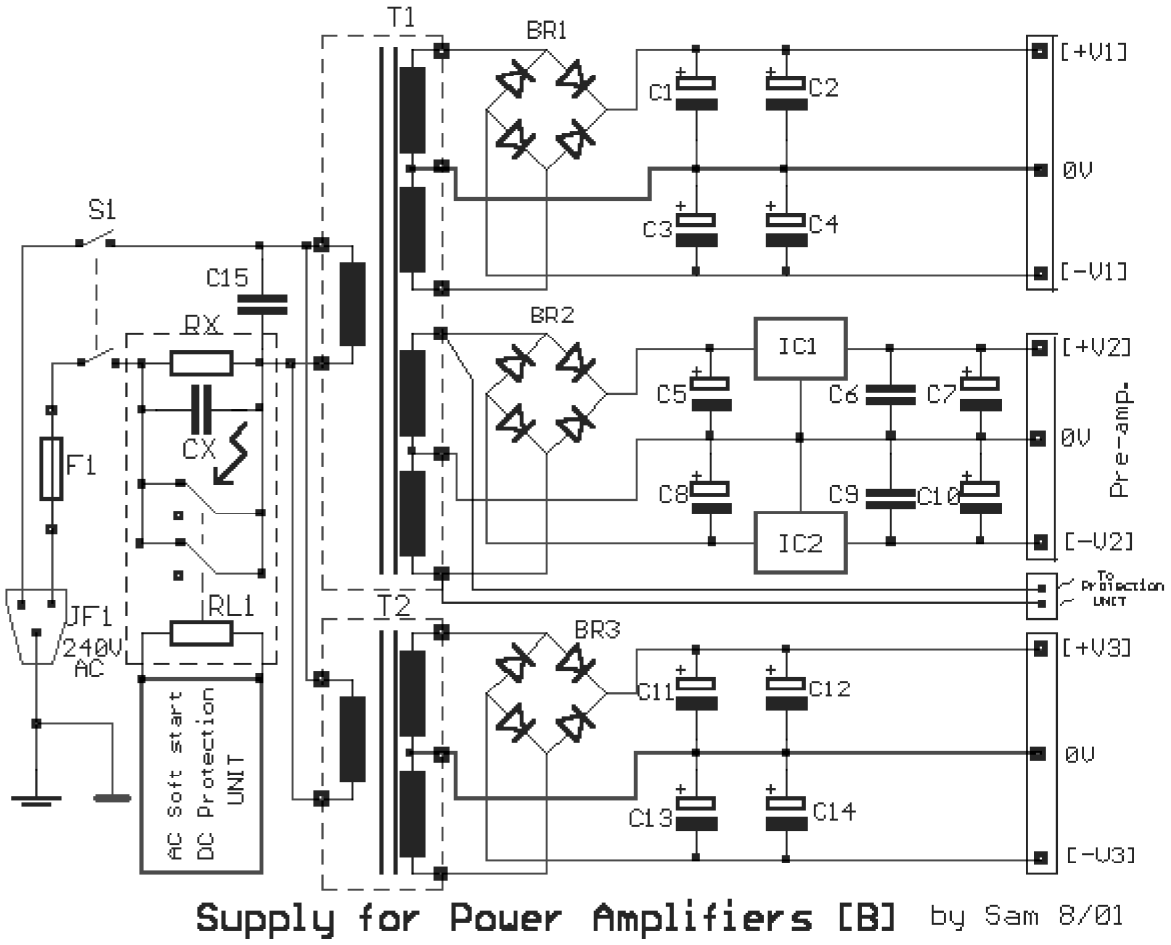

Điện áp ra :

+V1=+35V -V1=-35V
+V2=+12V -V2=-12V
+V3=+35V -V3=-35V

Linh kiện :

T1=2X25Vac 160VA //2X15Vac 20VA
T2=2X25Vac 160VA
BR1-3=200V 35A Bridge Rectifier
BR2=4 X 1N4002
C1...4-11...14=10000uF 63V

C5-8=1000uF 25V
C6-9=100nF 100V MKT
C7-10=10uF 25V
C15=33nF 630V Class X2
IC1=7812

IC2=7912
F1=FUSE 2A
S1=2X2 switch 10A
JF1=3 pole male plug

: Khuyếch đại âm thanh 60W ở chế độ AB

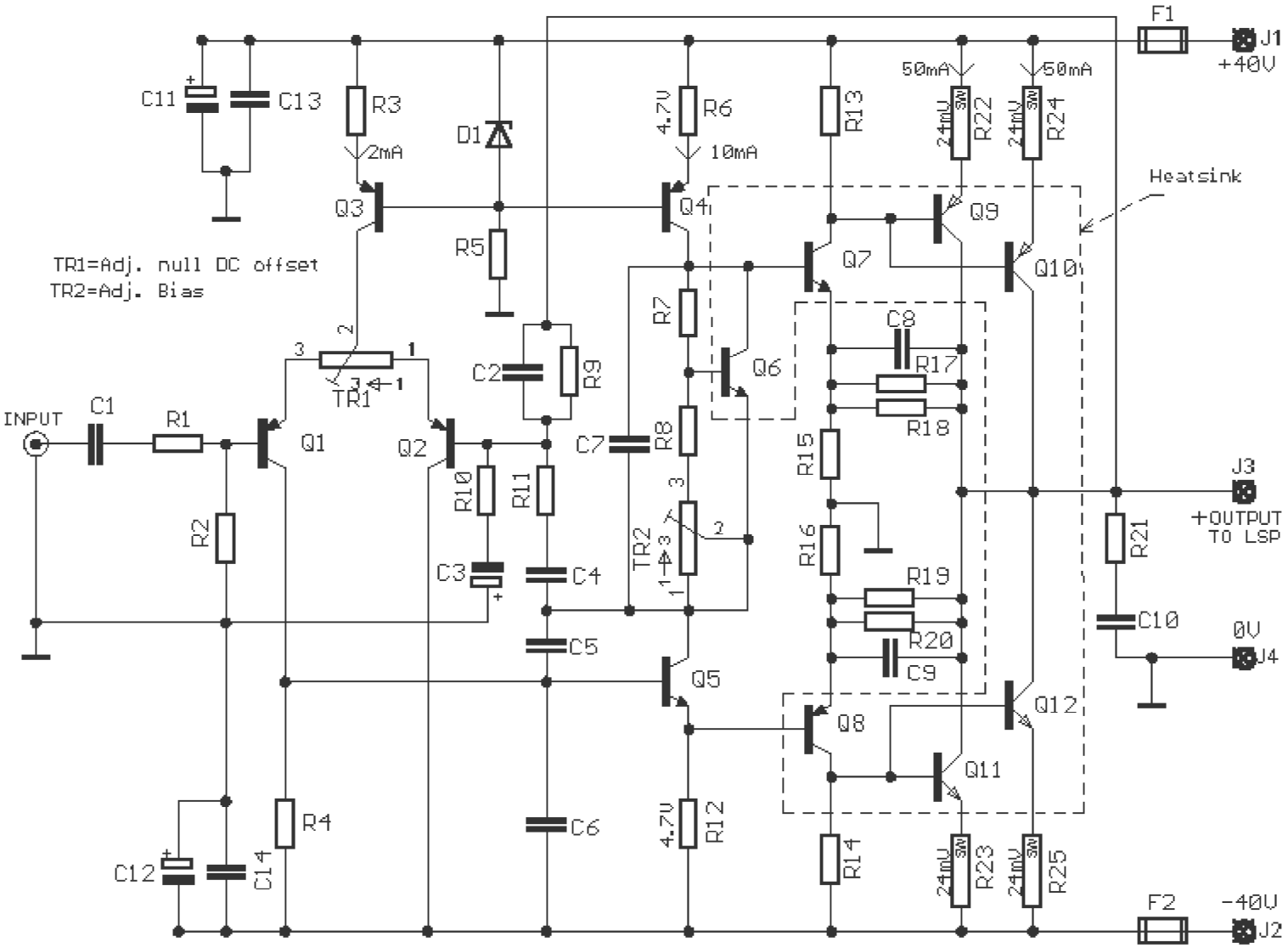

Linh kiện :

R1=1.5Kohm	**R21=10ohm 1W**	**D1=5V6 0.4W zener**
R2-9=10Kohm	**R22-23-24-25=0.47ohm 5W**	**Q1-2-3=BC557**
R3=2.7Kohm	**TR1=100ohm trimmer**	**Q4-8=BD140**
R4=5.6Kohm	**TR2=470ohm trimmer**	**Q5-7=BD139**
R5=3.3Kohm	**C1=2.2uF 100V MKT**	**Q6=BC549**
R6-12=470ohm	**C2=330pF**	**Q9-10=TIP2955 [MJE2955]**
R7-11=1.2Kohm	**C3=100uF 16V**	**Q11-12=TIP3055 [MJ3055]**
R8=560ohm	**C4=100pF**	
R10=220ohm	**C5=27pF**	**F1-2= 3A slow Fuse 5X20mm**
R13-14=47ohm	**C6=3.3nF 100V MKT**	
R15-16=33ohm 1W	**C7-8-9-10-13-14=100nF 100V MKT**	**All resistors is 1/2W 1% metal film**
R17-18-19-20=220ohm 1W	**C11-12=220uF 63V**	**except for announce differently**

: Mạch khuyếch đại âm thanh 45W với HEXFET

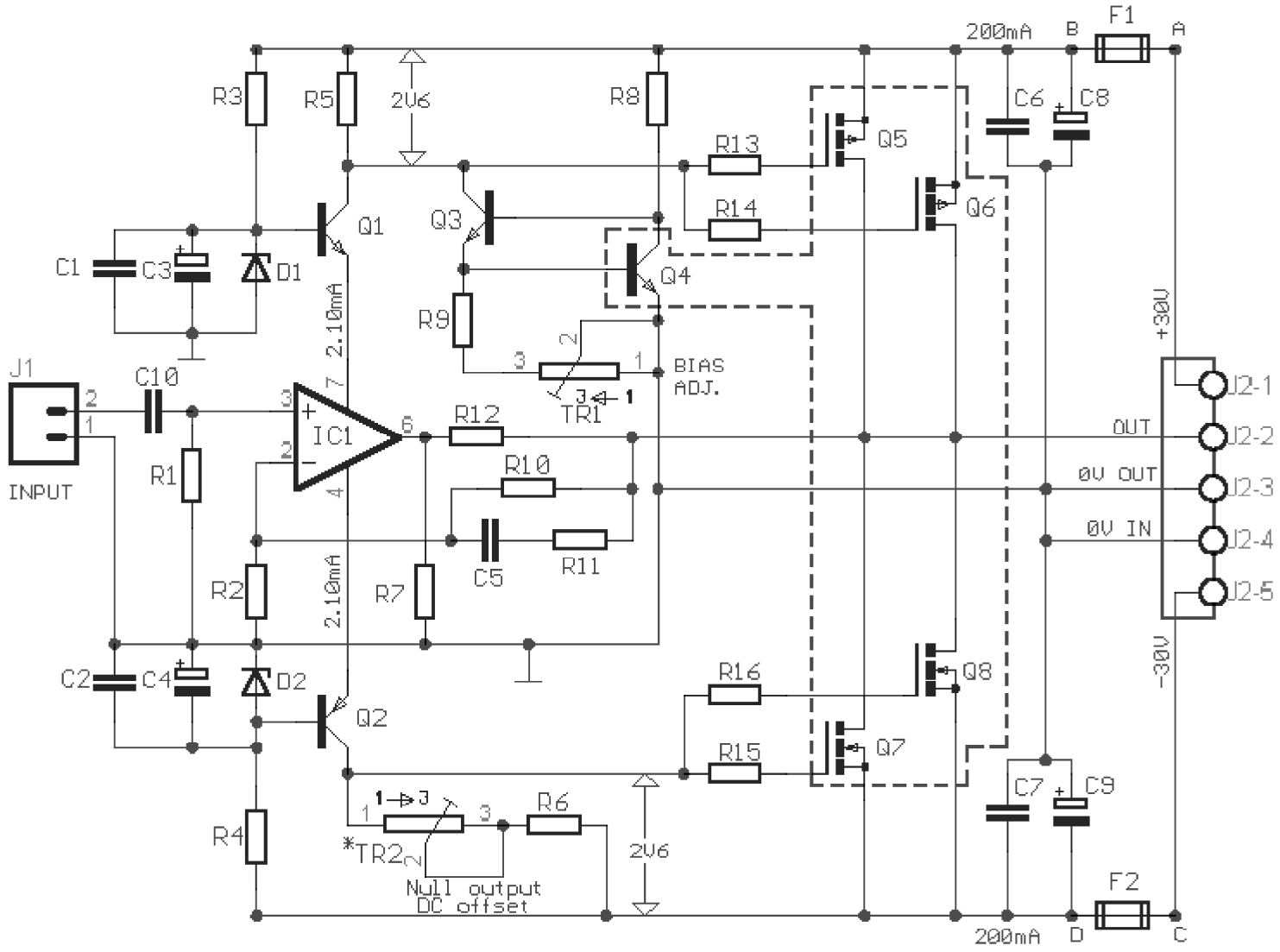

Fig.1--HEXFET POWER AMPLIFIER 45W Sam 6/02

Mạch này được cung cấp với 1 nguồn giống như mạch khuyếch đại trên với đâu ra :

+V1=+32V -V1=-32V
+V2=+12V -V2=-12V
+V3=+32V

Linh kiện :

R1=47Kohm
R2-12=1Kohm
R3-4=3.3Kohm
R5=1.2Kohm
R6=[1.2Kohm] 820ohm *See text
R7=270ohm
R8=220ohm
R9=27Kohm
R10-11=22Kohm
R13-14-15-16=150ohm

C1-2-6-7=100nF 100V MKT
C3-4=22uF 25V
C5=220pF styroflex
C8-9=4700uF 63V
C10=1uF 100V MKT
D1-2=15V 0.5W zener
IC1=LF411orAD711or LF351
Q1=BC550C
Q2=BC560C
Q3-4=BC547B

Q5-6=IRF9540
Q7-8=IRF540
TR1=5Kohm trimmer multiturn
TR2=1Kohm trimmer multiturn
F1-2=fuse 3A
J1=2pin connector 2.54mm step
J2=5pin connector 5mm step

All Resistors 1/4W 1% metal film

Công suất : 45W in 8 ohm - 75W in 4ohm

Tần số : 5 đến 20Khz

: Khuyếch đại âm thanh 35W với LM391

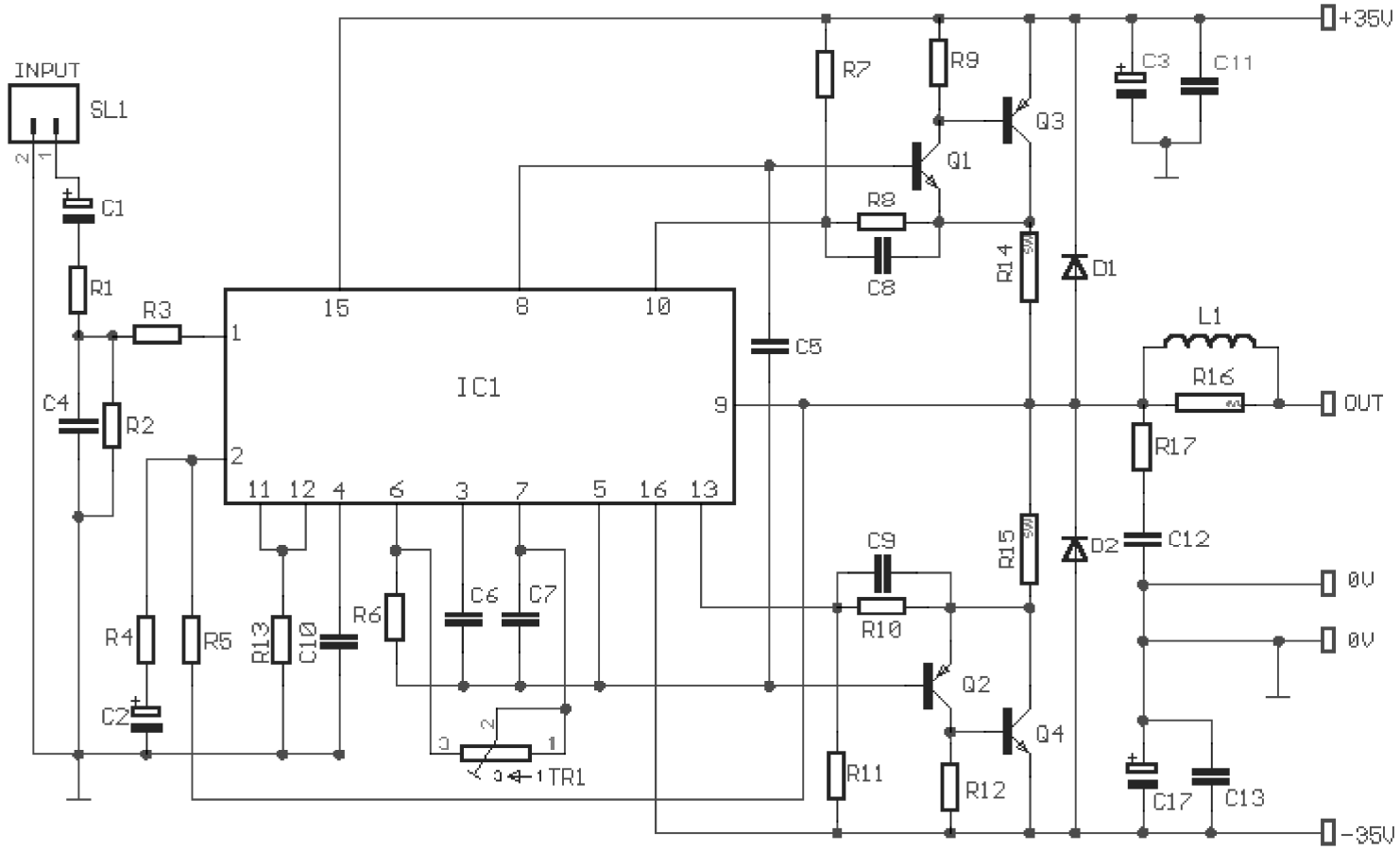

Fig.1- POWER AMPLIFIER 35W with LM391 Sam 4/02

Linh kiện :

R1-3-5-8-10=1Kohm	**C1=2.2uF 63V**	**TR1=10K biến trở**
R2-7-11=100Kohm	**C2=4.7uF 25V**	**D1-2=IN4002**
R4-6=4.7Kohm	**C3-17=47uF 63V**	**IC1=LM391**
R9-12=100ohm	**C4-8-9=1nF 100V**	**Q1=BD139**
R13=47Kohm	**C5=47nF 100V**	**Q2=BD140**
R14-15=0.15ohm 5W	**C6=22pF ceramic**	**Q3=TIP2955**
R16=1ohm 2W carbon 5%	**C7-11-12-13=100nF 100V MKT**	**Q4=TIP3055**
R17=10ohm 1W carbon 5%	**C10=22pF ceramic**	**L1=See text**

: Khuyếch đại âm thanh 2x18W dùng TDA1516Q

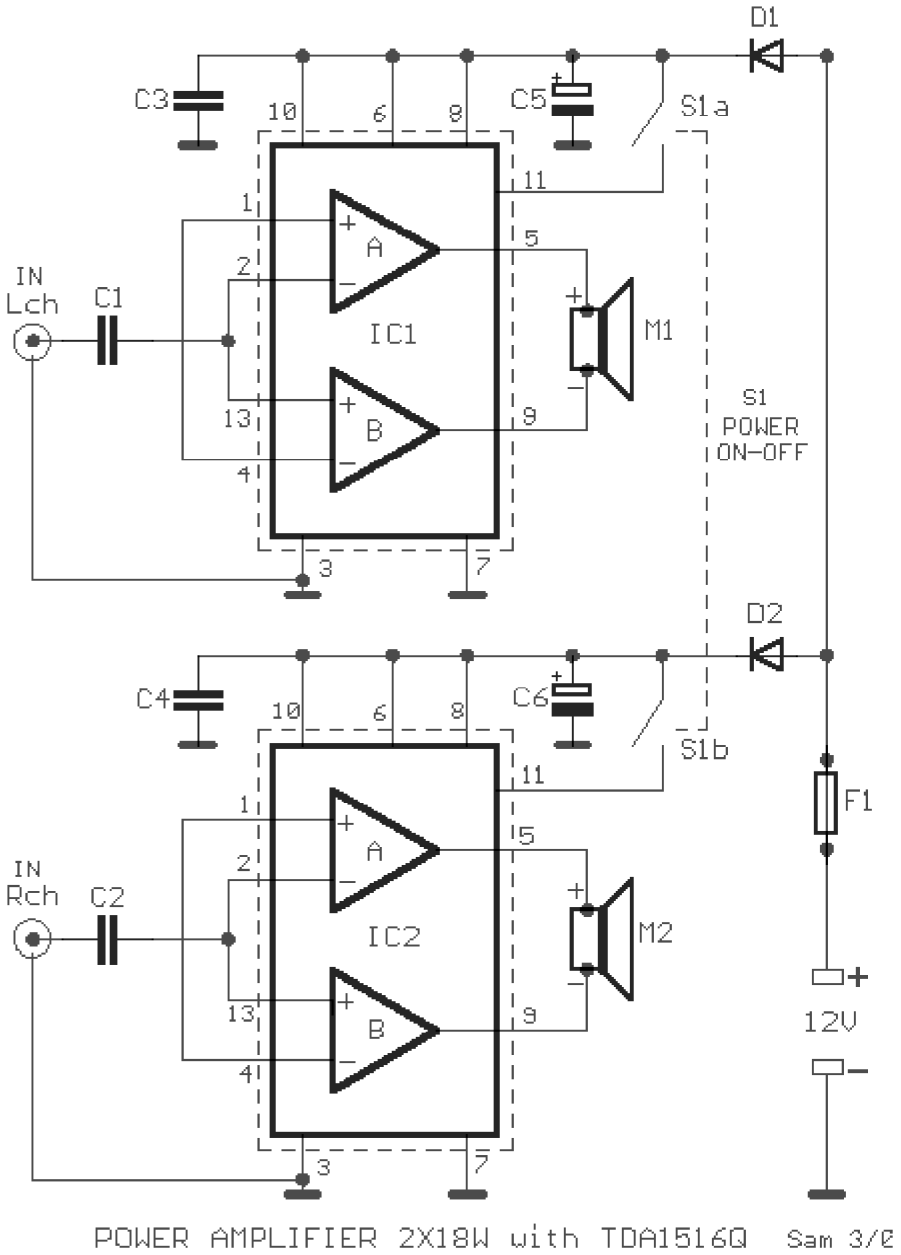

Linh kiện:

C1-2=220nF 100V MKT	**D1-2=1N5408**	**F1=3A Fuse**
C3-4=100nF 100V MKT	**IC1-2=TDA1516Q**	**S1=2X2 SW**
C5-6=2200uF 25V	**M1-2=Loundspeaker 30W/4ohm**	

: Khuyếch đại âm thanh 2x5W dùng TDA1516Q

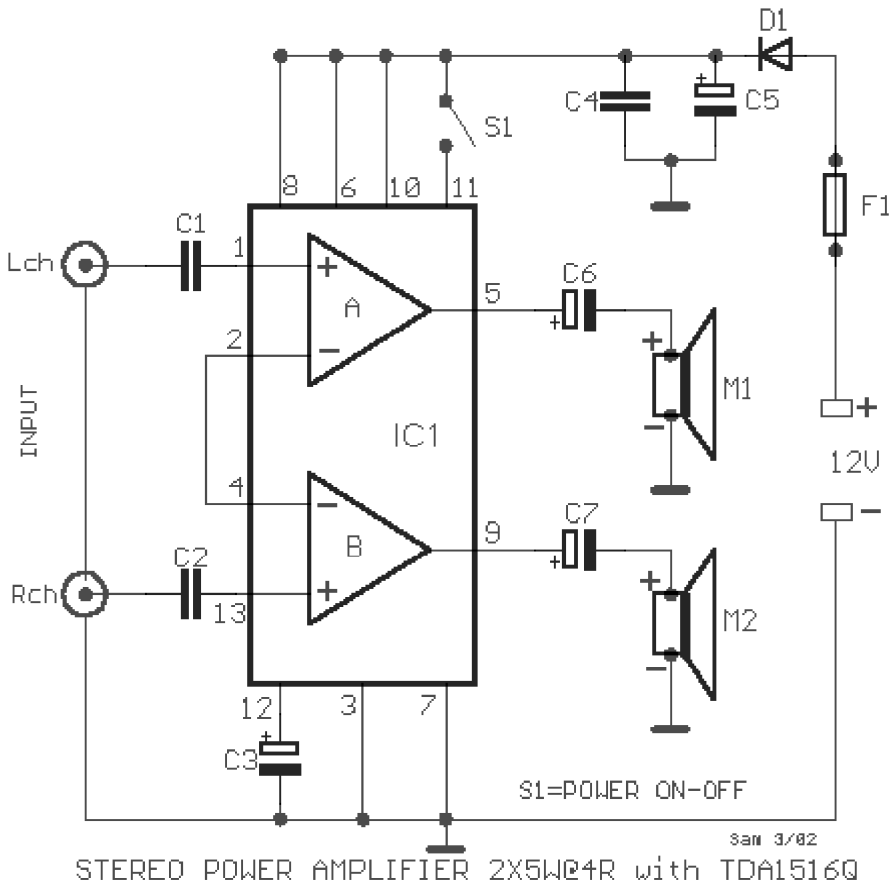

Linh kiện :

C1-2=220nF 100V MKT	**C5=2200uF 25V**	**IC1=TDA1516Q**
C3=100uF 25V	**C6-7=1000uF 40V**	**F1=2A Fuse**
C4=100nF 100V MKT	**D1=1N5408**	**M1-2=Loudspeaker 10w/4ohm**

: Khuyếch đại âm thanh cho loa 6W

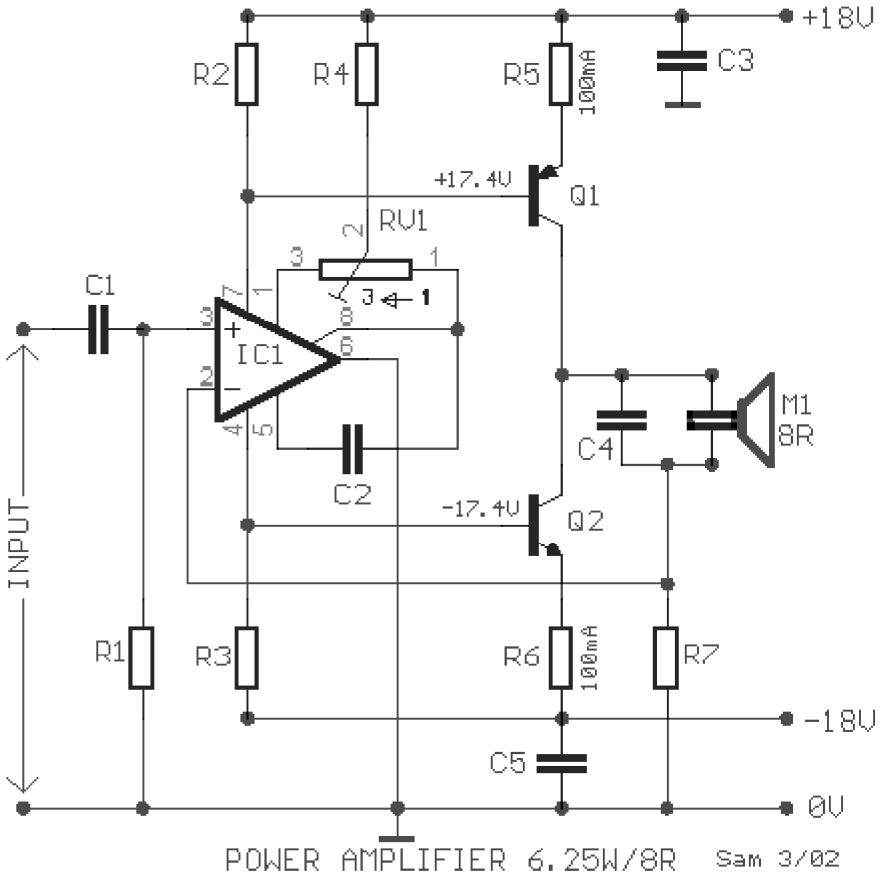

Linh kiện :

R1=10Kohm	**C1=470nF 100V MKT**	**Q1=BD242C**
R2-3=130ohm	**C2=22pF ceramic**	**Q2=BD241C**
R4=68Kohm	**C3-5=100nF 100V MKT**	**RV1=100Kohm**
R5-6=1ohm 1W	**C4=220nF 100V MKT**	**M1=8ohm >20W Loudspeaker**
R7=0.5ohm 1W	**IC1=NE5534**	

: Khuyếch đại công suất âm thanh 170W cho Loa

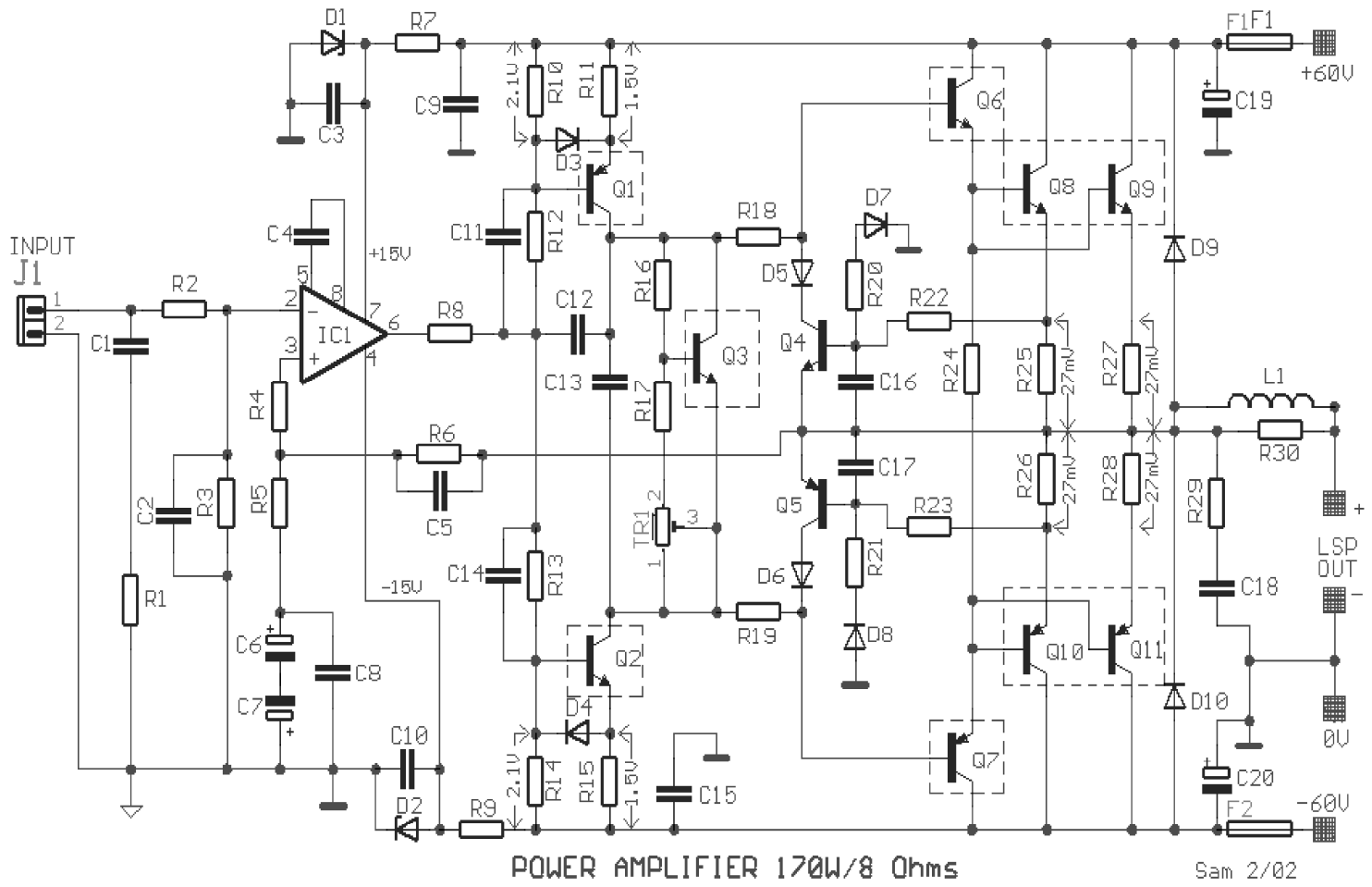

R1=68Kohm	**C1=2.2uF 100V MKT**	**Q2=MJE340**
R2=2.2Kohm	**C2=1nF 100V MKT**	**Q3=BD139**
R3-6=22Kohm	**C3-8-9-10-11-14-15=100NF**	**Q4=BC546B**
R4-22-23=1Kohm	**C4=33pF 160V polystyrene**	**Q5=BC556B**
R5-8-10-14=560 ohm	**C5=47pF 160V polystyrene**	**Q6=MJE15030**
R7-9=3.3Kohm 5W	**C6-7=100uF 63V**	**Q7=MJE15031**
R11-15=150 ohm	**C12=470pF 160V polystyrene**	**Q8-9=MJ15003**
R12-13=15Kohm	**C13=680nF 100V MKT**	**Q10-11=MJ15004**
R16=680 ohm	**C16-17=150nF 100V MKT**	**D1-2=15V 1.5W Z**
R17=180 ohm	**C18=33nF 250V MKT**	**D3-4=BAT85**
R18-19=10 ohm	**C19-20=100uF 100V**	**D5-6-7-8=1N4004**
R20-21=27Kohm	**L1= See text**	**D9-10=BY254**
R24=56 ohm	**F1-2=6.3AT FUSE**	
R25-26-27-28=0.27 ohm/ 5W	**TR1=250 ohms TRIM**	
R29=10 ohm/ 5W	**IC1=NE5534**	
R30=2.2 ohm/5W	**Q1=MJE350**	

Nguồn cung cấp

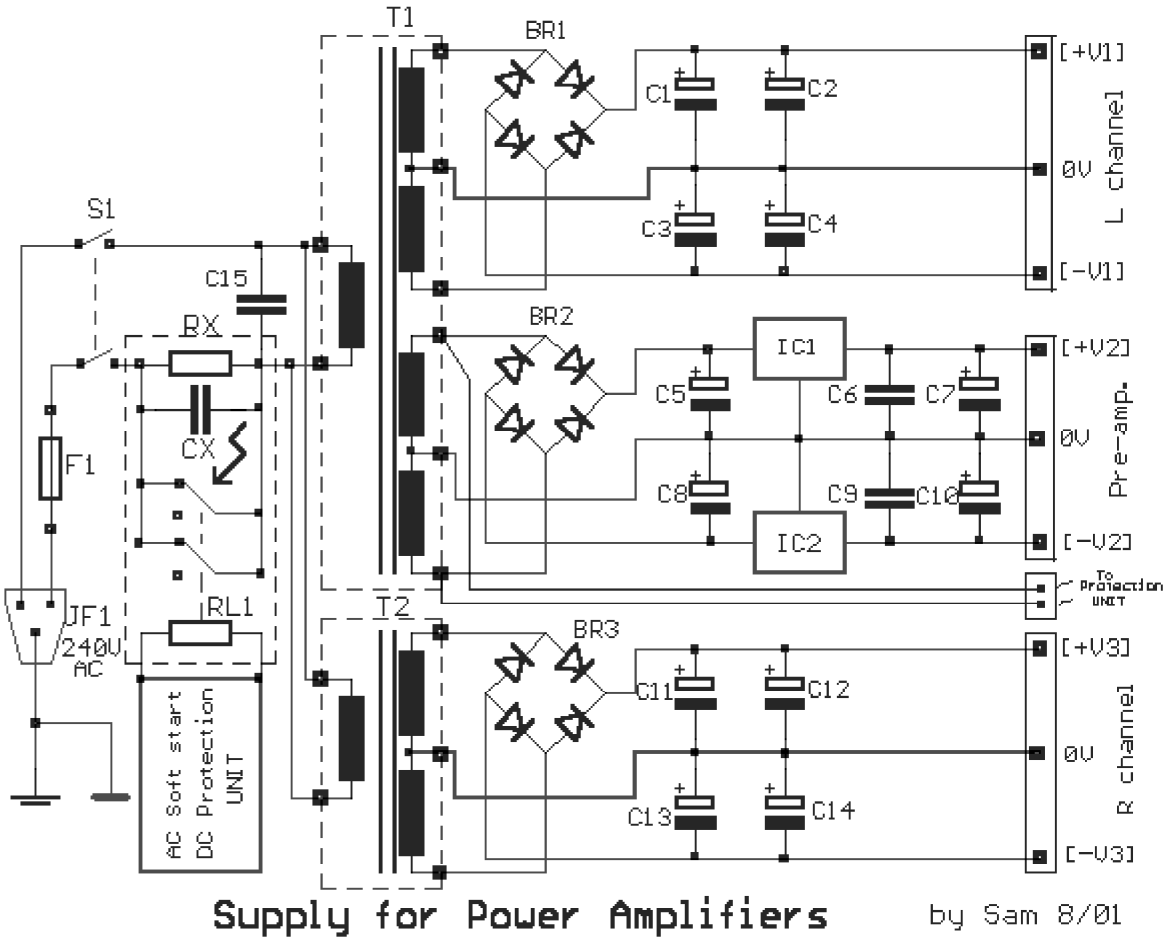

T1=110-240V@ 2X42.5V 650VA @[2X15V 1A*]	**BR1-3=400V 35A BRIDGE**	**C5-8=2200uF 25V**
	BR2=200V 3A BRIDGE	**C6-9=100nF 100V**
T2=110-240V@ 2X42.5V 650VA	**C1-2-3-4=10000 uF 100V**	**C7-10=47uF 25V**
F1=3.15 AT FUSE	**C11-12-13-14=10000 uF 100V**	**C15=33nF 630V**
RX-CX-RL1	**S1= SWITCH 2X2 10A**	

: Mạch khuyếch công suất đại âm thanh 60W ở chế A

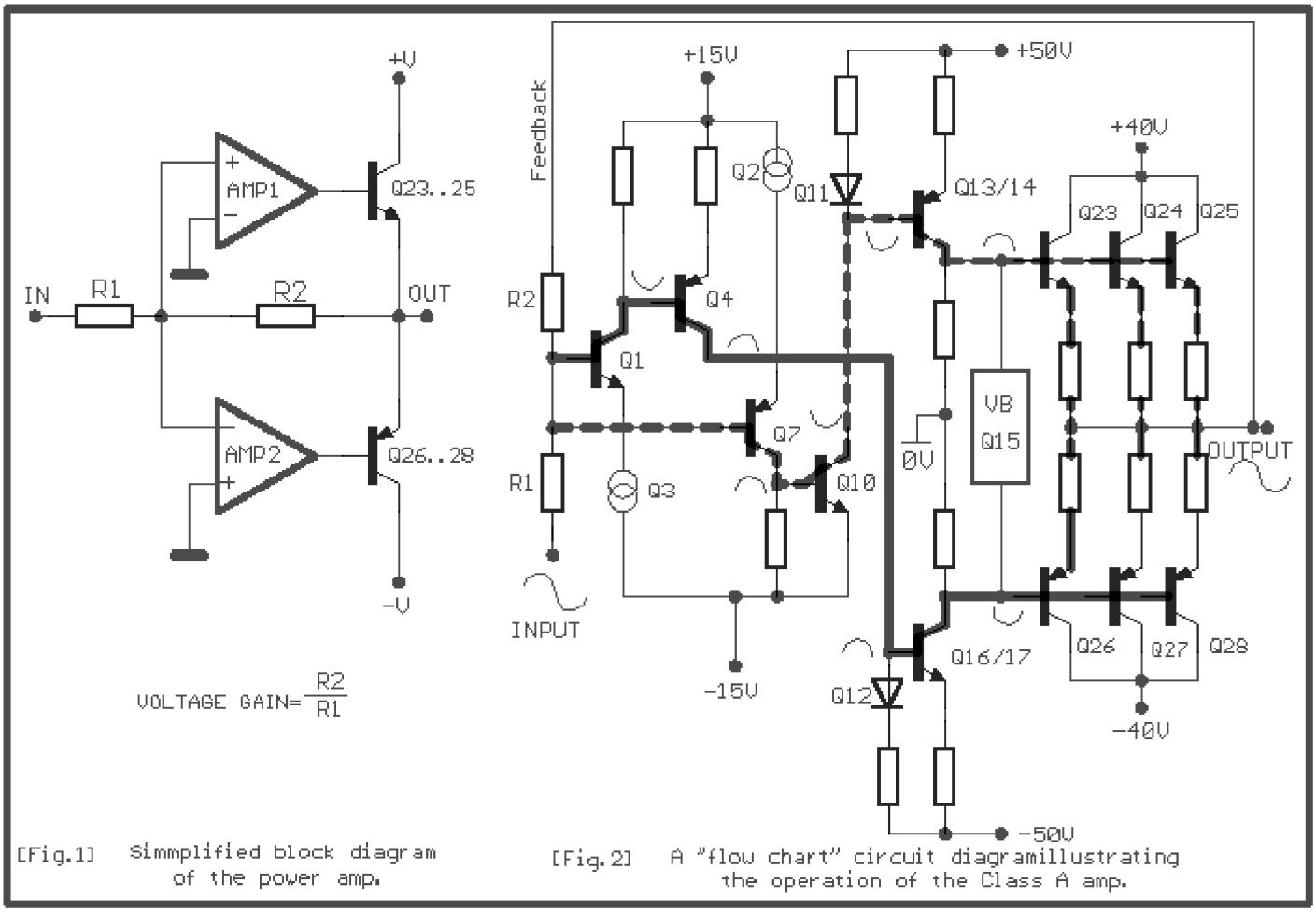

[Fig.1] Simmplified block diagram of the power amp.

[Fig.2] A "flow chart" circuit diagramillustrating the operation of the Class A amp.

mạch 2 :

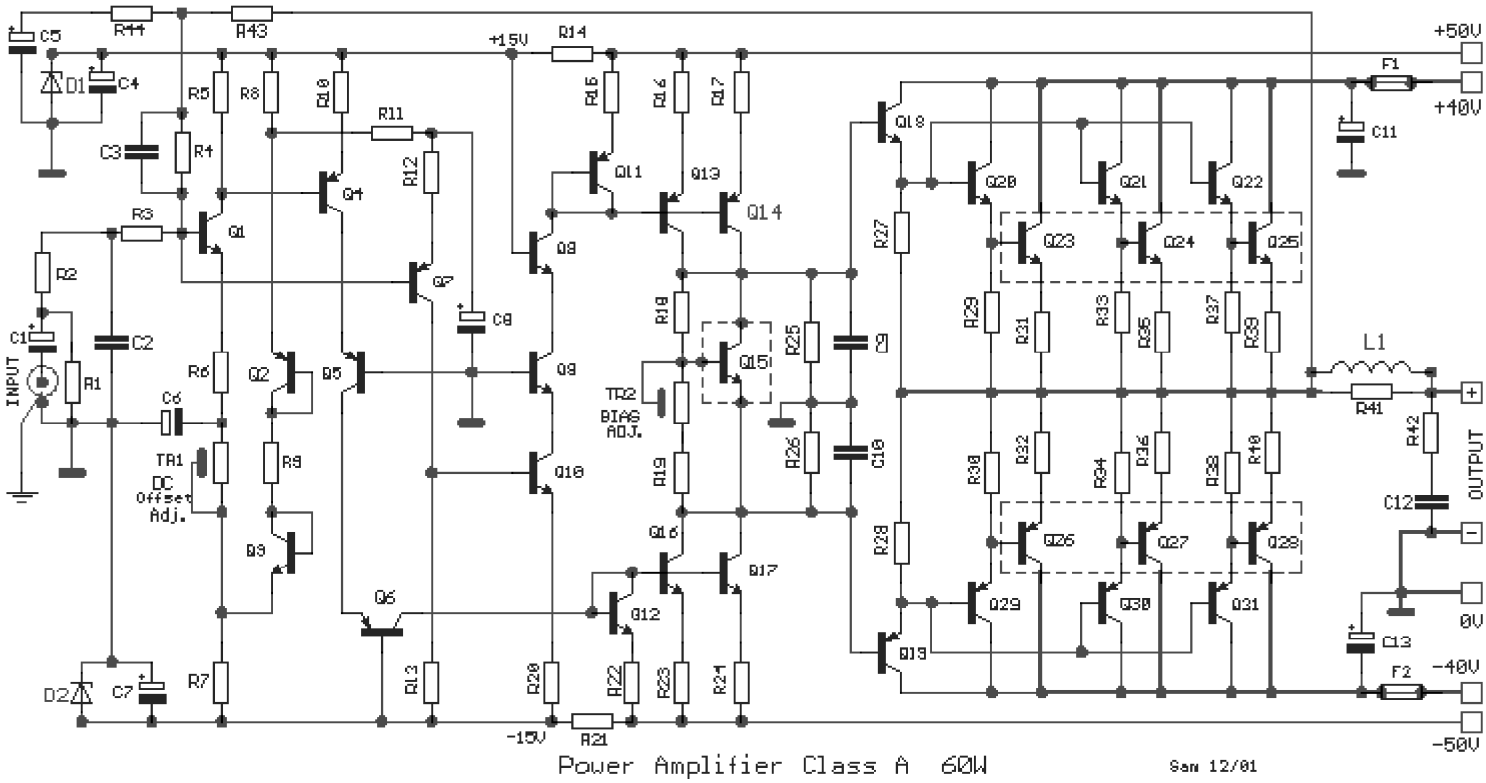

Linh kiện:

R1=47Kohm	R31-32-35-36-39-40=0.22ohm 5W	D1-2=15V 1.3W zener
R2-9-27-28=1Kohm	R41=10ohm 3W	Q1-3-8-9-10-15-18=MPSA06
R3-18=10Kohm	R42=10ohm 1W	Q2-4-5-6-7-19=MPSA56
R4=18Kohm	R43=5.6Kohm	Q11-13-14=MPSA93
R5-13=3.9Kohm	R44=330Kohm	Q12-16-17=2N6515
R6-12=560ohm	TR1=22Kohm trimmer	Q20-21-22=BD379
R7-8-19=2.7Kohm	TR2=2.2Kohm trimmer	Q23-24-25=MJ802
R10-20=120ohm	C1=10uF 16V	Q26-27-28=MJ4502
R11=12Kohm	C2=1.5nF 100V MKT	Q29-30-31=BD380
R14-21=680ohm 0.5W	C3-9-10=100pF ceramic or Mylar	L1=
R15-22-29-30-33-34-37-38=100ohm	C4-5-6-7-8=100uF 25V	F1-2=5A fuse fast
R16-17-23-24=220ohm	C11-13=220uF 63V	.
R25-26=22Kohm	C12=220nF 250V MKT	

Nguồn cung cấp:

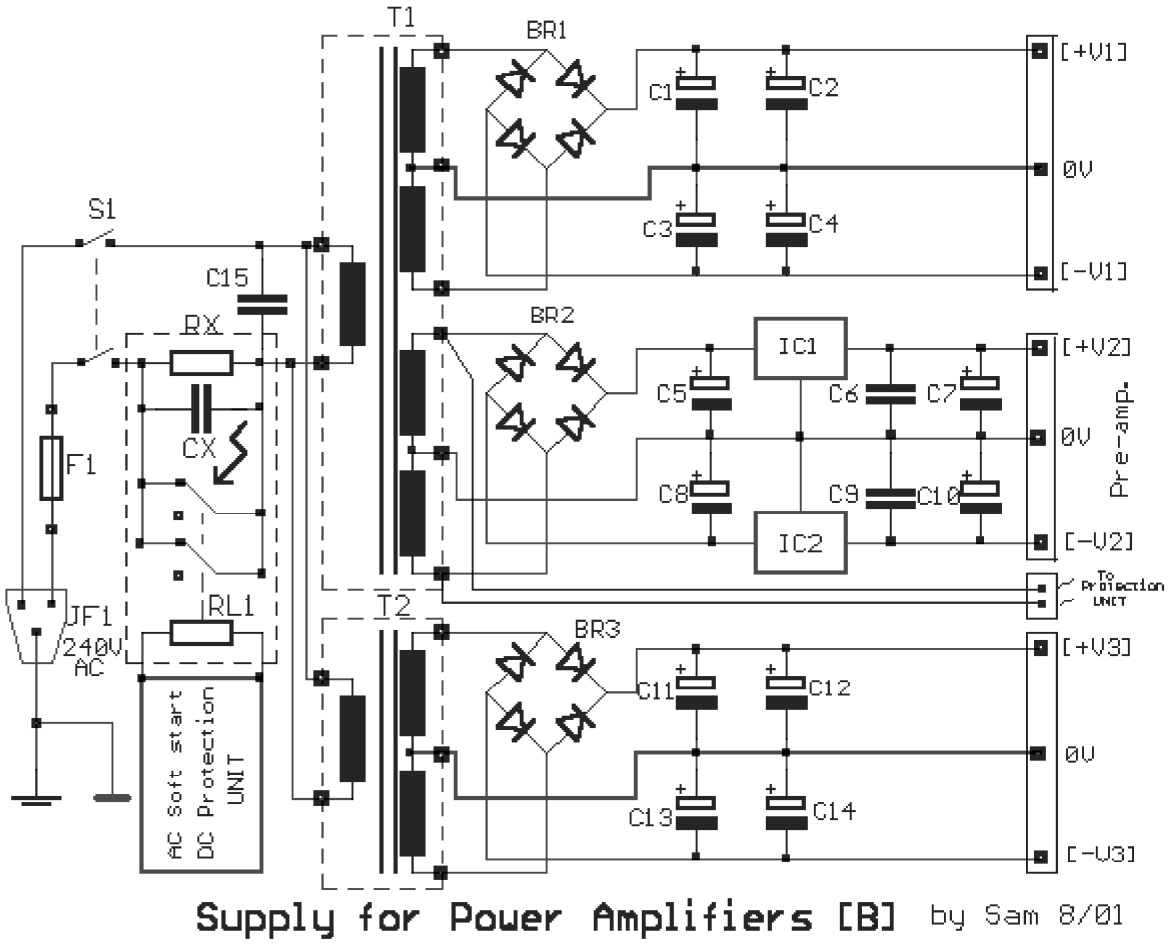

Điện áp đầu ra : V1 = +-40 - V2 = +-12 - V3 = +-50

Linh kiện :

C1....4=15000uF 63V	C15=33nF 630V	S1= 2X2 switch 250V/10A
C5-8=2200uF 25V	BR1=Bridge 250V 35A	IC1=7812 IC2=7912
C6-9=100nF 100V	BR2=Bridge 250V 3A	T1=230VAC// 2X28V AC

- 500VA

//2X15V AC - 20VA

T2=230VAC // 2X35V AC - 40VA

: Mạch khuyếch công suất đại âm thanh 40W ở chế A

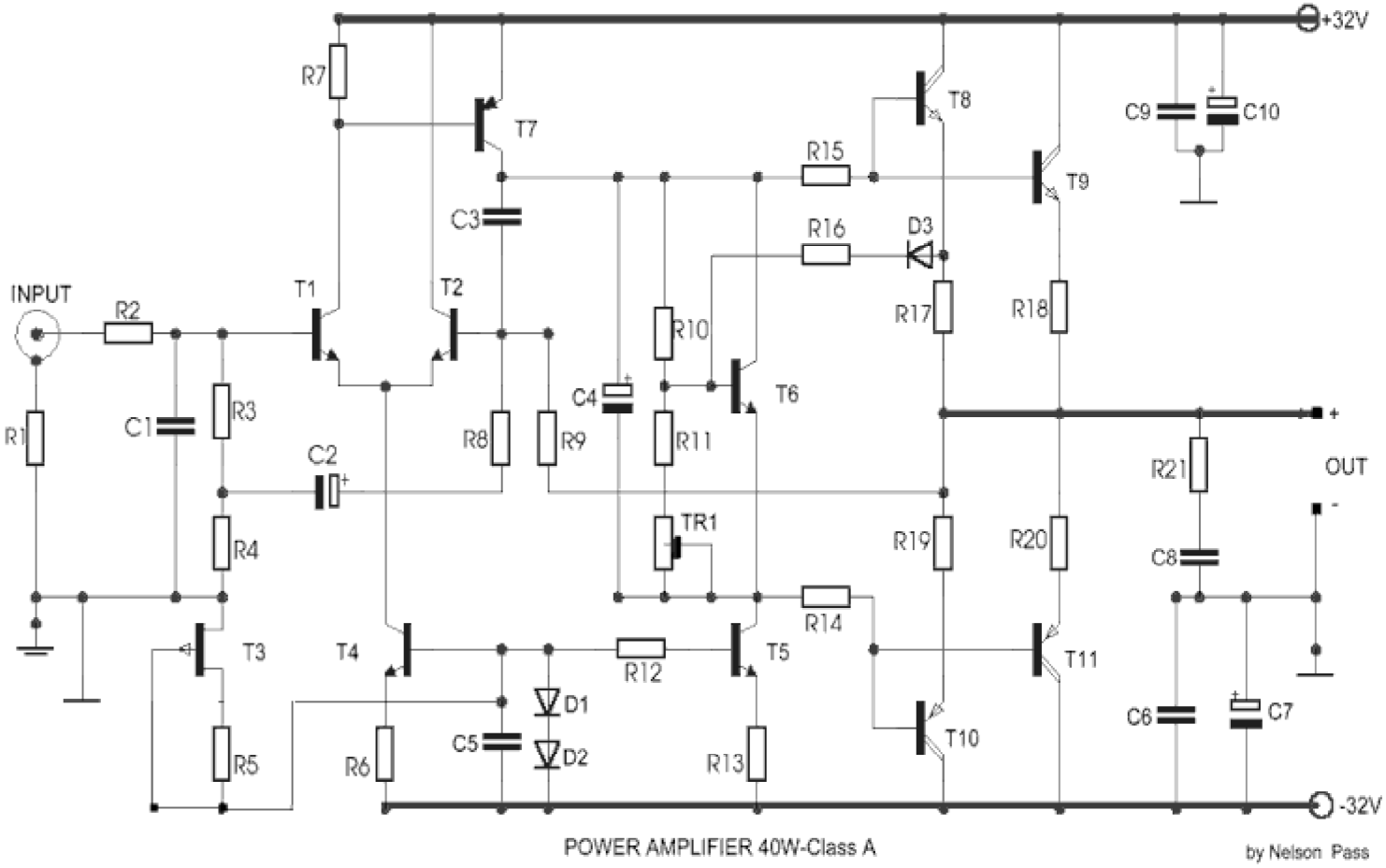

Linh kiện :

R1=10ohm	**R19-20 =0.68ohm /5W 5%**	**T1-2=MPSL01**
R2-16 =2.2Kohm	**R21 =10ohm /1W 5%**	**T3=2N5248 - J204 - BF245C**
R3-9= 10Kohm	**C1=330 pF 100V 5%**	**T4-5=MPSL01**
R4-6 =330ohm	**C2-4=220 uF 16V**	**T6=MPSL01**
R5-11-12 =470ohm	**C3=39 pF 100V 5%**	**T7=MPSL51**
R7=680ohm	**C5-6=100nF 100V**	**T8-9=PMD16K100 Lambda 2N6284**
R8-13= 100ohm	**C8-9=100nF 100V**	**RCA**
R10= 4.7Kohm	**C7-10=220 uF 63V**	**T10-11=PMD17K100 Lambda**

R14-15=68ohm	**D1-2-3=1N4148**	**2N6287 RCA**
R17-18 =0.68ohm / 5W 5%	**TR1=1k2 Trimmer**	**ALL Resistors is 1% metal film**

: Mạch khuyếch công suất đại âm thanh 60W ở chế AB

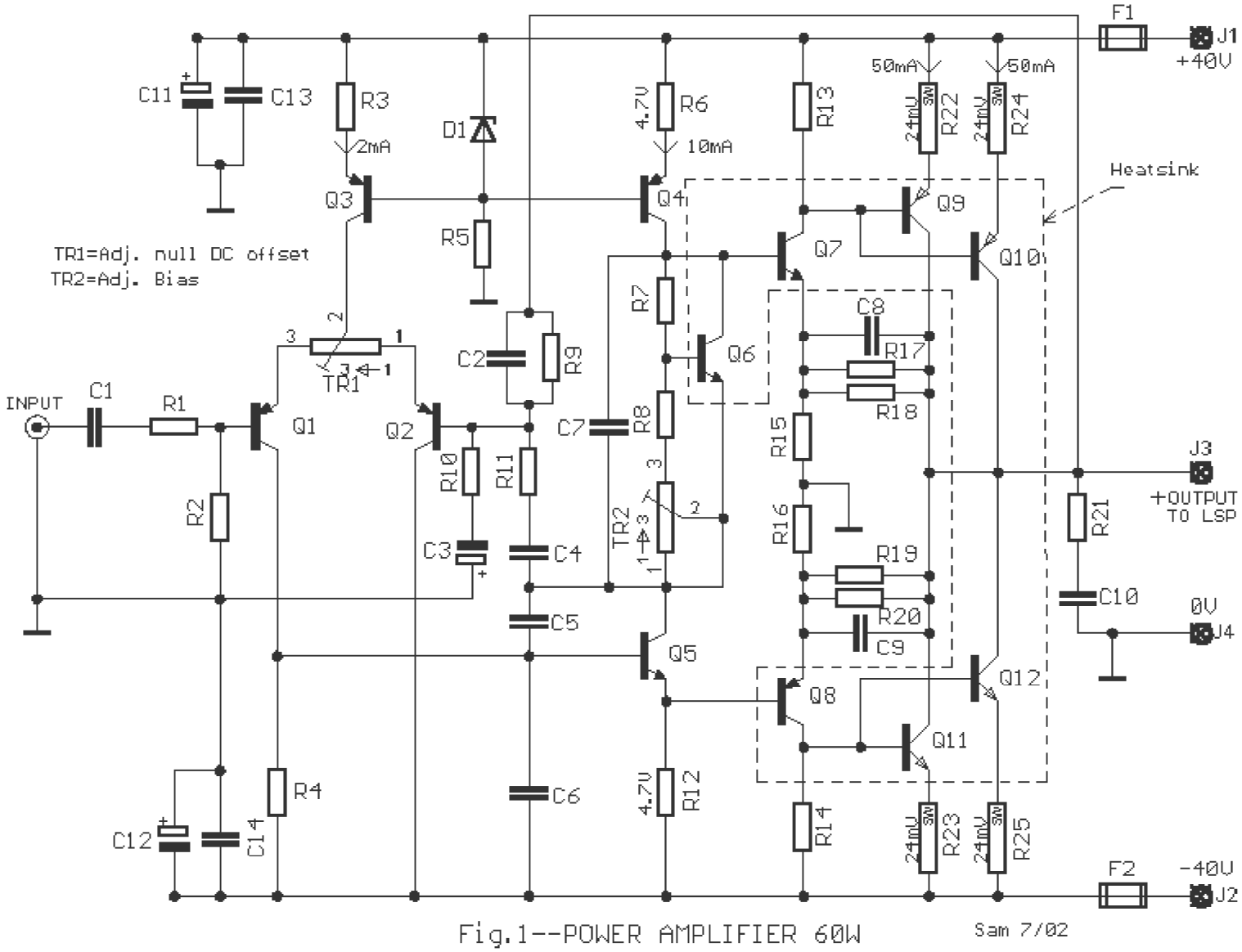

Lnh kiện :

R1=1.8Kohm	**R25=8.2Kohm**	**D1-2=24V/1W Zener**	**C1=4.7uF/25V**
R2=220Kohm	**R26=27Kohm**	**D3....9=1N4002**	**C2=470pF**
R3=27Kohm	**R27=820ohm**	**T1-2=BC550C**	**C3-4=100uF/63V**
R4-10-11-17=3.3Kohm	**R28=3.3Kohm**	**T3-4=BC560C**	**C5=68pF**
R5-9-12-16=100ohm	**R29=100ohm**	**T5-13=BD530**	**C6-10=330pF**
R6=18Kohm	**R31-39=180ohm**	**T6-8=BC414C**	**C7=22pF**
R7-13=3.9Kohm	**R32-38=6.8Kohm**	**T9=BC416C**	**C8=220uF/16V**
R14=10Kohm	**R33-34=1.2Kohm**	**T7-10=BD529**	**C9=100nF 100V**
R15=22Kohm Trimmer	**R35=82ohm /1W**	**T11=BD591**	**C11-12=10pF**

R18-23=330ohm	**R36-37=0.33ohm / 5W**	**T14=BD592**	**C13-15=47uF/63V**
R19-21-22=15Kohm	**R40-41=10ohm / 2W**	**T12=2N5630**	**C16-17=100nF/100V**
R20=12Kohm	**R42=180ohm/5W**	**T15=2N6030**	**C18-19=100nF/100V**
R24-30=82ohm	**TR1=4.7Kohm Trimmer**		

: Khuyếch đại công suất âm thanh 300W

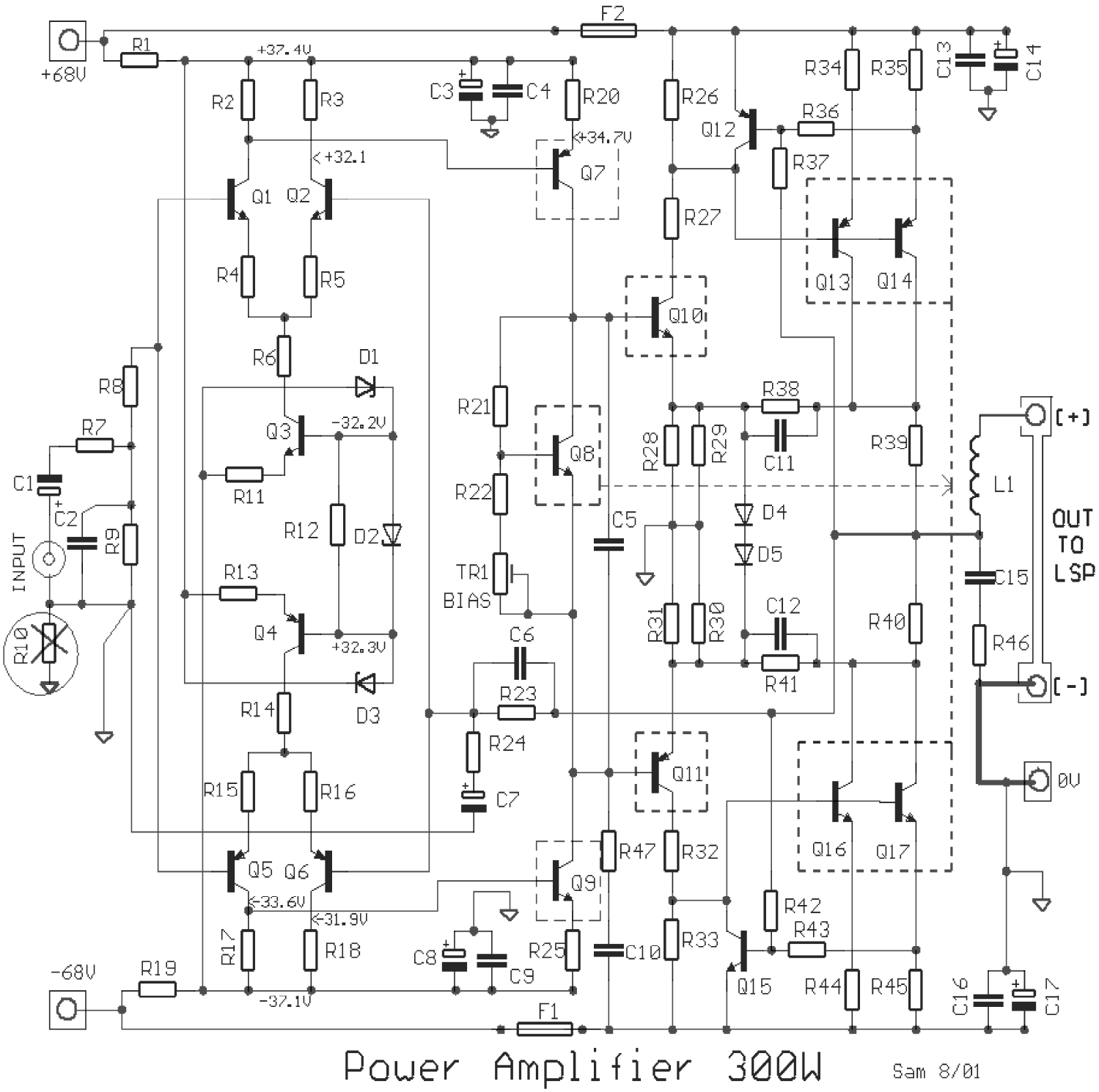

Công suất	**200W rms/8 ohm**	
	310W rms/4 ohm	
	800W rms/8 ohm	
	Tần số	**20HZ-20KHZ +/-0.5dB**
	Đầu vào nhạy cảm	**1V for 200W/300W**
	THD	**<0.1%**
	Hệ số tắt	**65**

Linh kiện :

R1-19= 1Kohm 5W	**R34-35= 0.1ohm 5W**	**C14-17= 100uF 100V**
R2-3= 4.7Kohm	**R36-43= 39ohm**	**C15= 100nF 250V polyester**
R4-5= 22ohm	**R37-42= 5.6Kohm 1W**	**Q1-2-3= BC547**
R6-14= 10Kohm	**R38-41= 220ohm 5W**	**Q4-5-6= BC557**
R7-8= 1Kohm	**R39-40= 0.1ohm 5W**	**Q7-11-12= BD140 or BC640**
R9-23*=10K ohm	**R44-45= 0.1ohm 5W**	**Q8= BC549**
R10= 10ohm *see circuit sch.	**R46= 4.7ohm 2W**	**Q9-10-15= BD139 or BC639**
R11-13= 2.2Kohm	**R47= 100ohm**	**Q13-14= MJ15004**
R12= 22Kohm	**C1= 2.2uF 25V**	**Q16-17= MJ15003**
R15-16= 22ohm	**C2-6= 330pF ceramic**	**TR1= 2K2 Trimmer**
R17-18= 4.7Kohm	**C3-8= 100uF 100V**	**F1-2= 5A Fuse Fast**
R20-25= 390ohm	**C4-9= 100nF 250V**	**D1-3= 5.1V 0.5W Zener**
R21= 6.8Kohm	**C5= 100nF 100V polyester**	**D2= 62V/5W Zener or 47v and 15V in series**
R22= 4.7Kohm	**C7= 100uF 25V**	**D4-5= 1N4004**
R24-26-33= 220ohm	**C10= 1.5nF 100V polyester**	**L1=10 turns diameter 1mm in 15mm diameter tube**
R27-32= 100ohm 1W	**C11-12= 1.5nF 100V polyester**	
R28,29,30,31= 100ohm	**C13-16= 100nF 250V polyester**	

Mạch nguồn cung cấp:

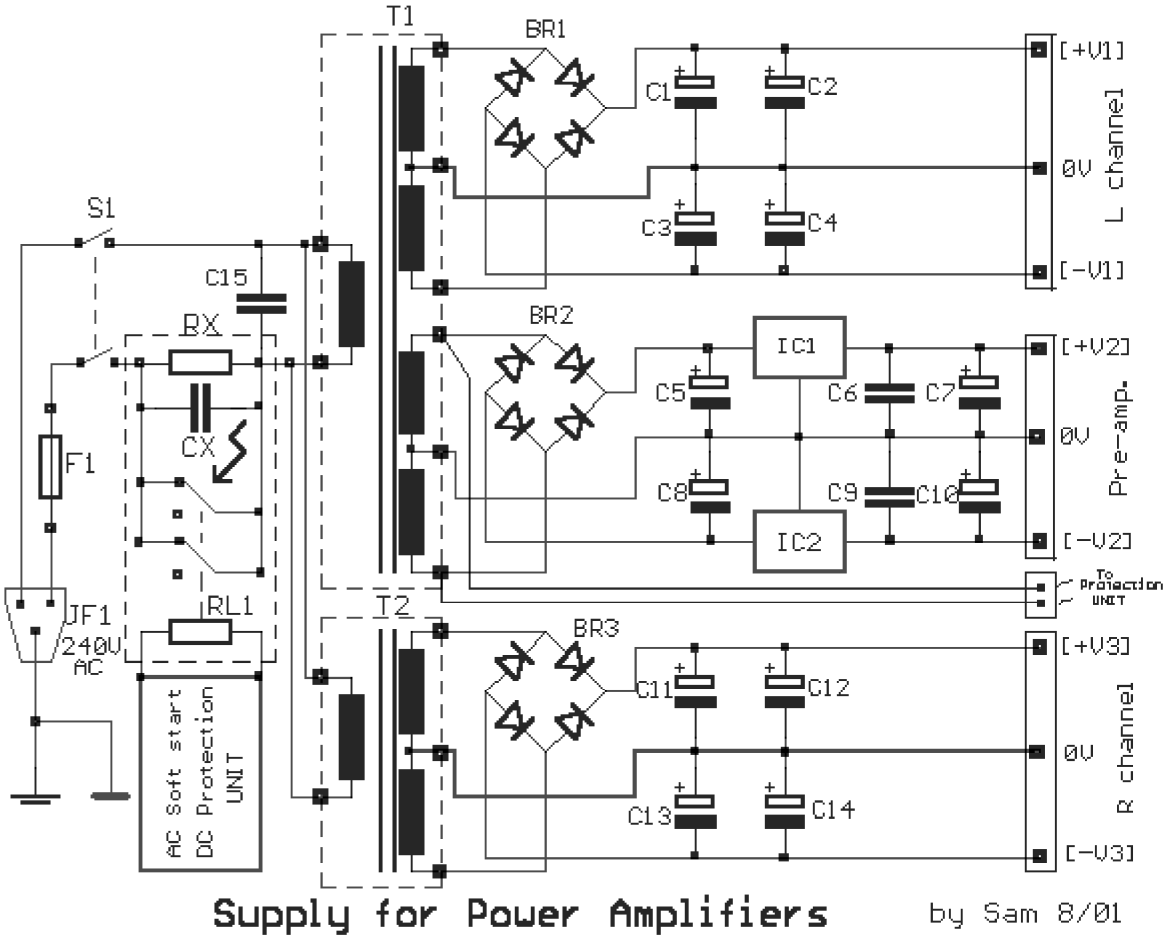

nguồn đầu ra :

[+V1]= +68V DC	**[+V2]= +15V DC**	**[+V3]= +68V DC**

[-V1]= -68V DC	**[-V2]= -15V DC**	**[-V3]= -68V DC**

Linh kiện :

T1= 230V AC/ 2X47V 350VA	**C1-4= 4700 uF 100V**	**C15= 33nF 630Vac**
	C5-8= 4700 uF 25V	**CX= 33nF 630Vac**
2X15V 30 VA*		
T2=230V AC/ 2X47V 350VA	**C6-9= 100nF 100V**	**F1= Fuse 2A Slow**
BR1-3=4x1N5404 or 35A Bridge	**C7-10= 47uF 25V**	**IC1= 7815T**
RX= 47R 15W	**C11...14= 4700uF 100V**	**IC2= 7915T**

Khuyếch đại công suất âm thanh *HAFLER DH-200*

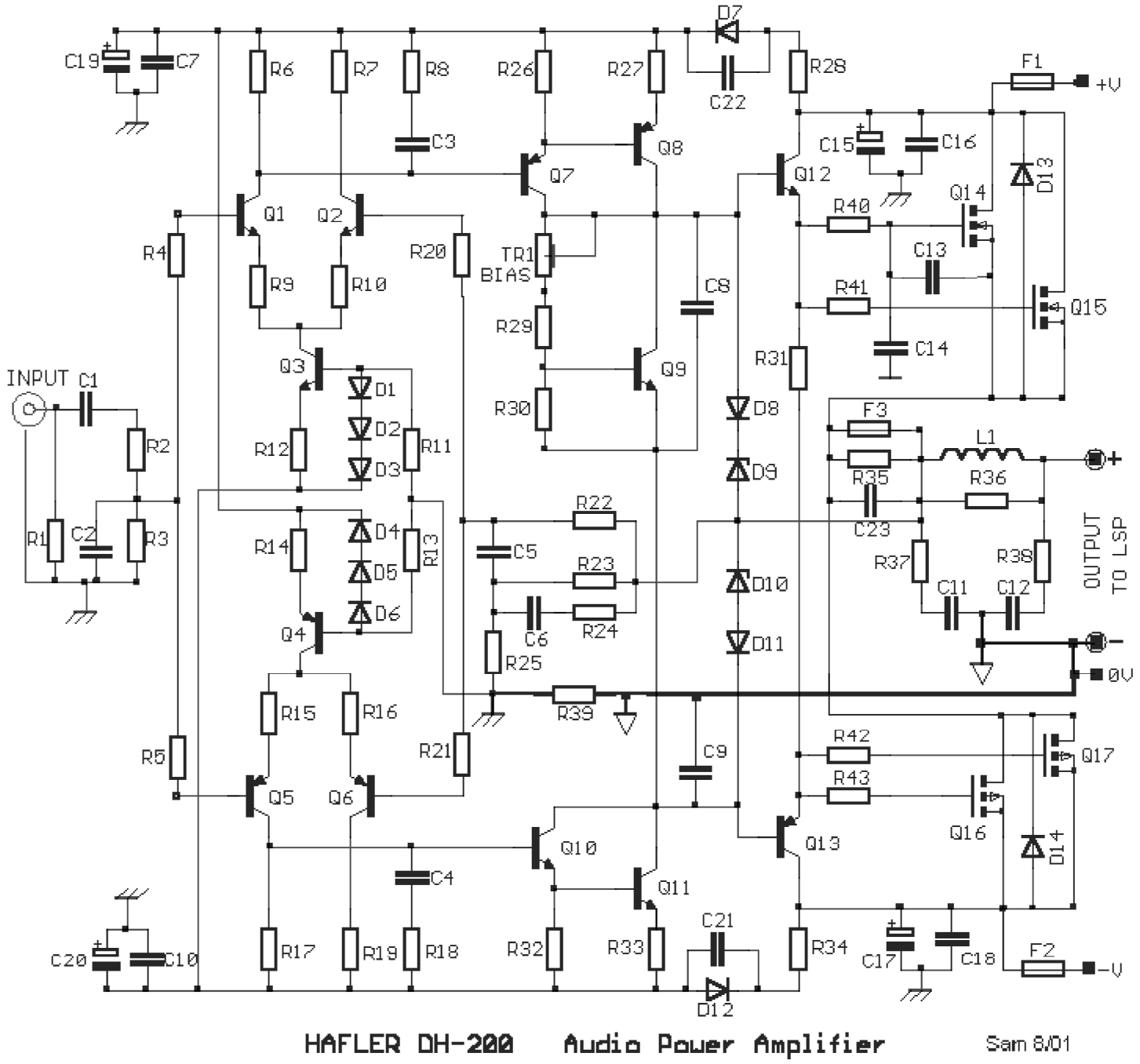

POWER	**100W-8 ohm**	
	IMD (SMPTE)	**Less than 0.005% from 1 to 100 W into 8 ohm**
	THD at 100W into 8 ohm	**1 KHZ- 0.0015%** **10 KHZ- 0.005%** **20 KHZ- 0.012%**
	Tần số	**±0.5 dB 10 HZ to 40 KHZ at 100W**
	tách kênh	**60 dB**
	Tín hiệu	**Better than 100dB at 100W into 8 ohm**
	Trở kháng đầu vào	**22K**
	Tính nhạy cảm input	**1.5V RMS for 100W into 8 ohm**
	Hệ số tắt dần	**150 to 1KHZ into 8 ohm** **50 to 10KHZ into 8 ohm**

Linh kiện :

R1=470Kohm	R39=0.5 ohm 0.5W	D8-11=1N4148
R2=2.2Kohm	R40....43=220 ohm 0.5W	D9-10=1N5240B
R3-22=22Kohm	C1=10uF 16V non-polarized electr.	Q1-2-3-9=2N5550
R4-5-20-21-25-27-33-35=100 ohm	C2-13=390pF 500V Mica	Q4-5-6-7=2N5401
R6-7-17-19-23=2.2Kohm	C3-4=1nF 100V Film	Q8-13=2N5415
R8-18=330 ohm	C5=470uF 6.3V non-polarized electr.	Q10=2N5550
R9-10-15-16=22 ohm	C6=270pF 500V mica	Q11-12=2N3440
R11-13=39Kohm	C7-8-10-16-18=100nF 100V Film	Q13=2N5415
R12-14-24=560 ohm	C9=680pF 500V mica	Q14-15=2SK134
R26-32=1.8Kohm	C11=10nF 100V film	Q16-17=2SJ49
R28-34=47 ohm 0.5W	C12=100nF 100V film	TR1=1K Trimpot
R29=1Kohm	C14=47pF 500V mica	F1-3=5A FUSE
R30=470 ohm	C15-17-19-20=470uF 100V	F2=3A FUSE
R31=220 ohm 0.5W	C21-22=10nF 100 film	L1= COIL
R36=1 ohm 5W 5%	C23=4.7nF 100V film	All resistors are 1/4W 5%
R37=10 ohm	D1....6=1N4148	carbon film unless otherwise
R38=10 ohm 2W	D7-12-13-14=1N4003	noted.

: Mạch khuyếch đại âm thanh 100W dùng MosFet

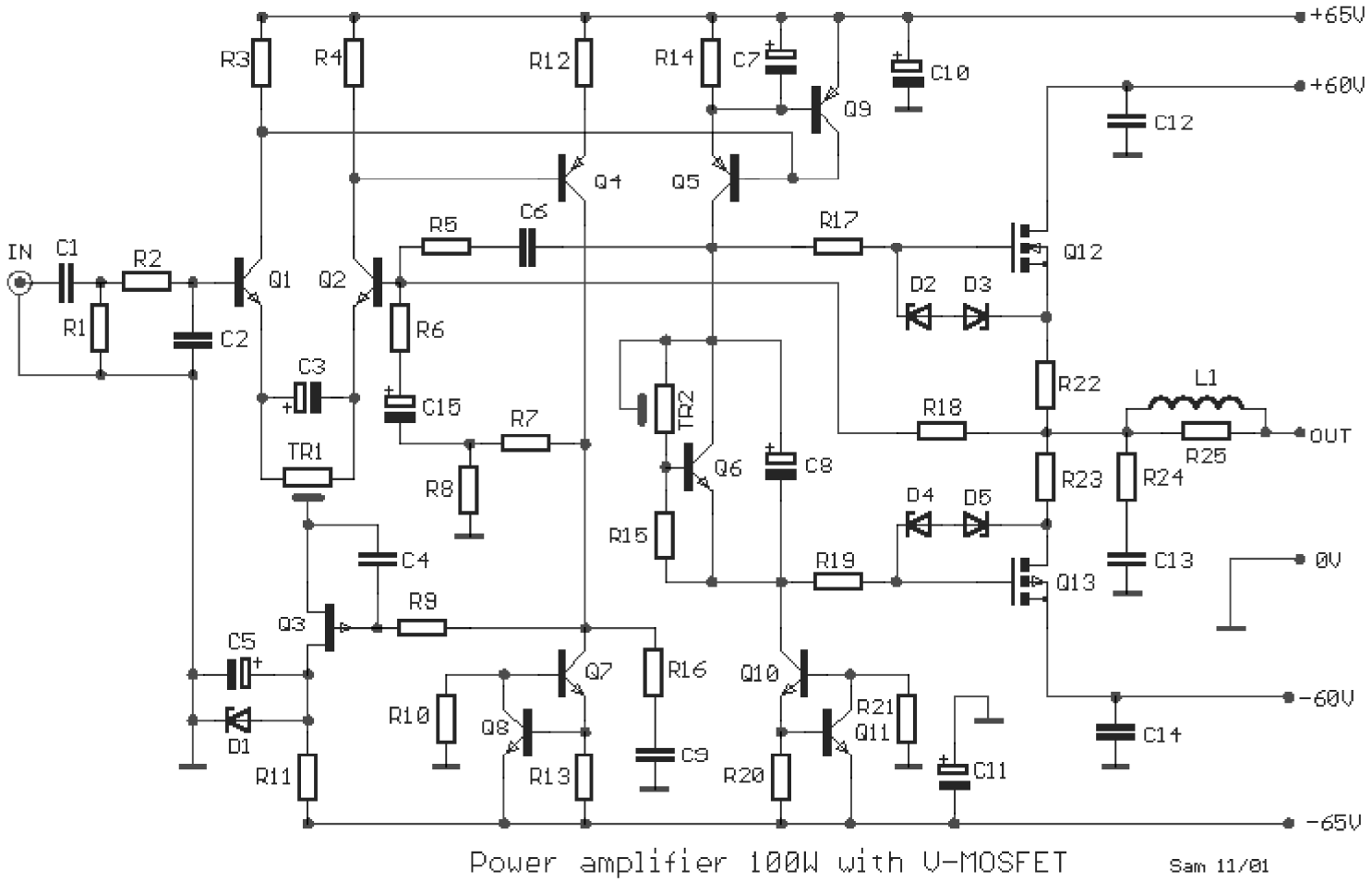

Linh kiện

R1=27Kohm	**R24=8.2ohm**	**D1=12V 0.5W Zener**
R2-11=4.7Kohm	**R25=10ohm 1W**	**D2.....5=8.2V 1W Zener**
R3-4=5.6Kohm	**TR1=470ohm trimmer**	**L1=20 turns 0.6mm on R25**
R5=47Kohm	**TR2=4.7Kohm trimmer**	**Q1-2=BC 547**
R6=1Kohm	**C1=1uF 63V mkt**	**Q3=2N5460 fet**
R7-10-21=22Kohm	**C2=1nF 100V***	**Q4-5=MPSA93**
R8=12ohm	**C3=100uF 16V**	**Q6-8-11=BC182**
R9=1Mohm	**C4=100nF 100V***	**Q7-10=MPSA43**
R12=33ohm	**C5-7=22uF 16V**	**Q9=BC212**
R13-20=82ohm	**C6=4.7pF ceramic**	**Q12=2SK134 or 2SK135**
R14=33ohm	**C8=47uF 16V**	**Q13=2SJ49 or 2SJ50**
R15=2.7Kohm	**C9=1nF 100V***	
R16=270ohm	**C10-11=100uF 100V**	***polyester or mylar**
R17-19=680ohm	**C12-14=100nF 250V mkt**	
R18=33Kohm	**C13=150nF 100V mkt**	
R22-23=0.33ohm 5W	**C15=100uF 35V**	

: Khuyếch đại công suất âm thanh 2 kênh

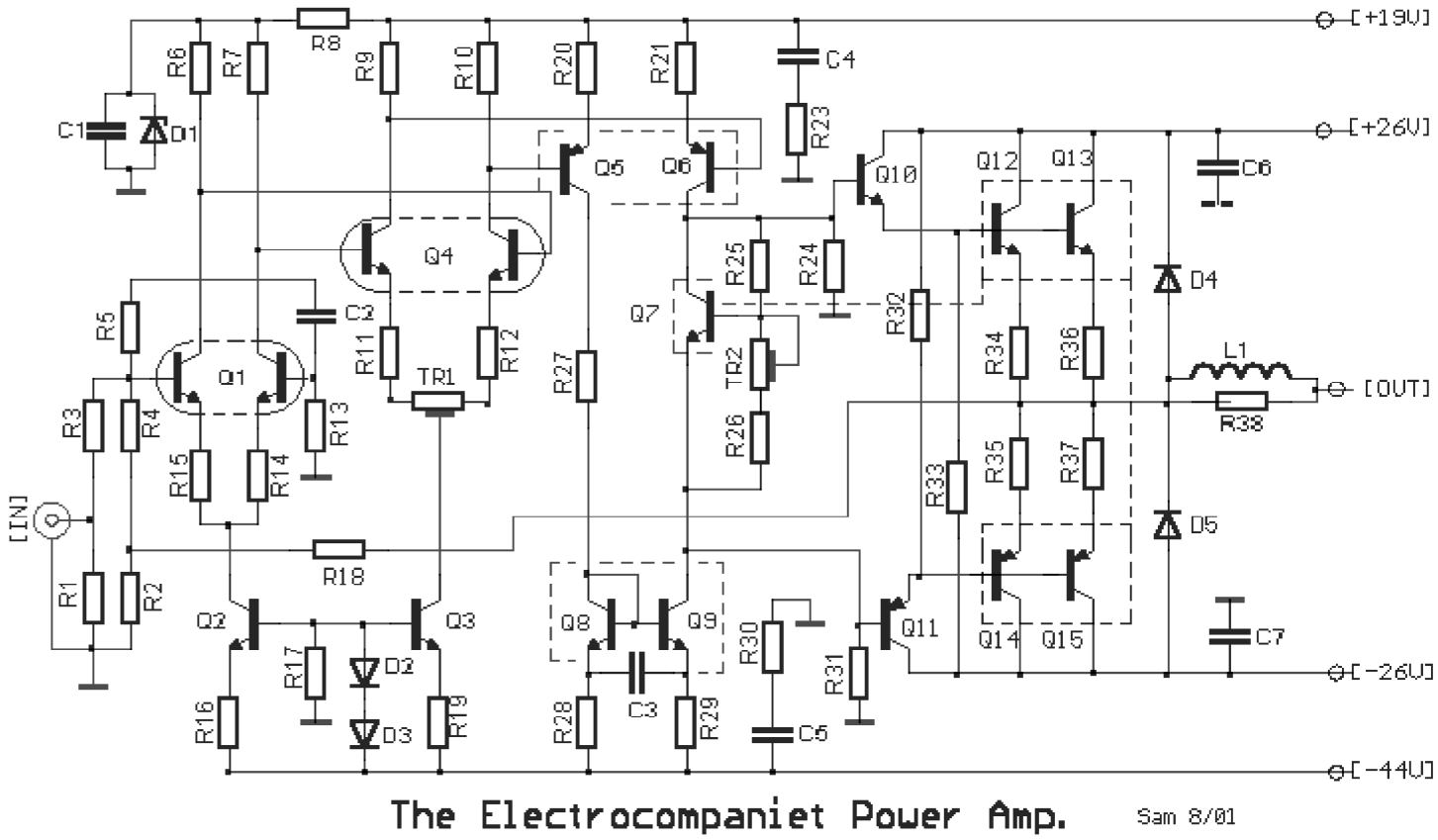

OUTPUT POWER	**25W/8 ohm - 40W/4 ohm**
hệ số tắt	**160 [8 ohm]**
Trở kháng input	**1Kohm**
Nhip độ	**125V/µs**
Tần số	**1W/8 ohm DC-1MHZ**
THD	**0.01% 12.5W**
TIM	**0.03% 12.5W**
S/N	**100dB**

Linh kiện :

R1-3-19= 1.8Kohms	**R24-31= 2.2Kohms**	**D1= 15V 0.5W Zener**
R2= 10 ohms	**R25= 2.7Kohms**	**D2-3= 1N4148**
R4= 12Kohms	**R28-29= 10 ohms**	**D4-5= BY206**
R5= 120 ohms	**R32-33= 56 ohms**	**Q1= BCY87**
R6-7-27= 1Kohms	**R34-35= 1 ohms/5W**	**Q2-3= ZTX384**
R8-13= 2.7Kohms	**R36-37= 1 ohms/5W**	**Q4= BCY89**
R9-10= 1Kohms	**R38= 1 ohms/ 3W**	**Q5-6= BD140**
R11-12= 33 ohms	**C1-6-7= 100nF 100V Polyester**	**Q7-8-9= BD139**
R14-15-20-21= 10 ohms	**C4-5= 680nF 100V Polyester**	**Q10= BD139**
R16= 3.3Kohms	**C2= 2.2nF 100V Polyester**	**Q11= BD140**
R17= 4.7Kohms	**C3= 2.5nF 100V Polyester**	**Q12-13= BD203**
R18-26= 470 ohms	**TR1= 220 ohms Trimmer**	**Q14-15= BD204**
R23-30= 1 ohm	**TR2= 1Kohms Trimmer**	**All R is metal film 1% except R34-38**

: Khuyếch đại âm thanh nhỏ 8W

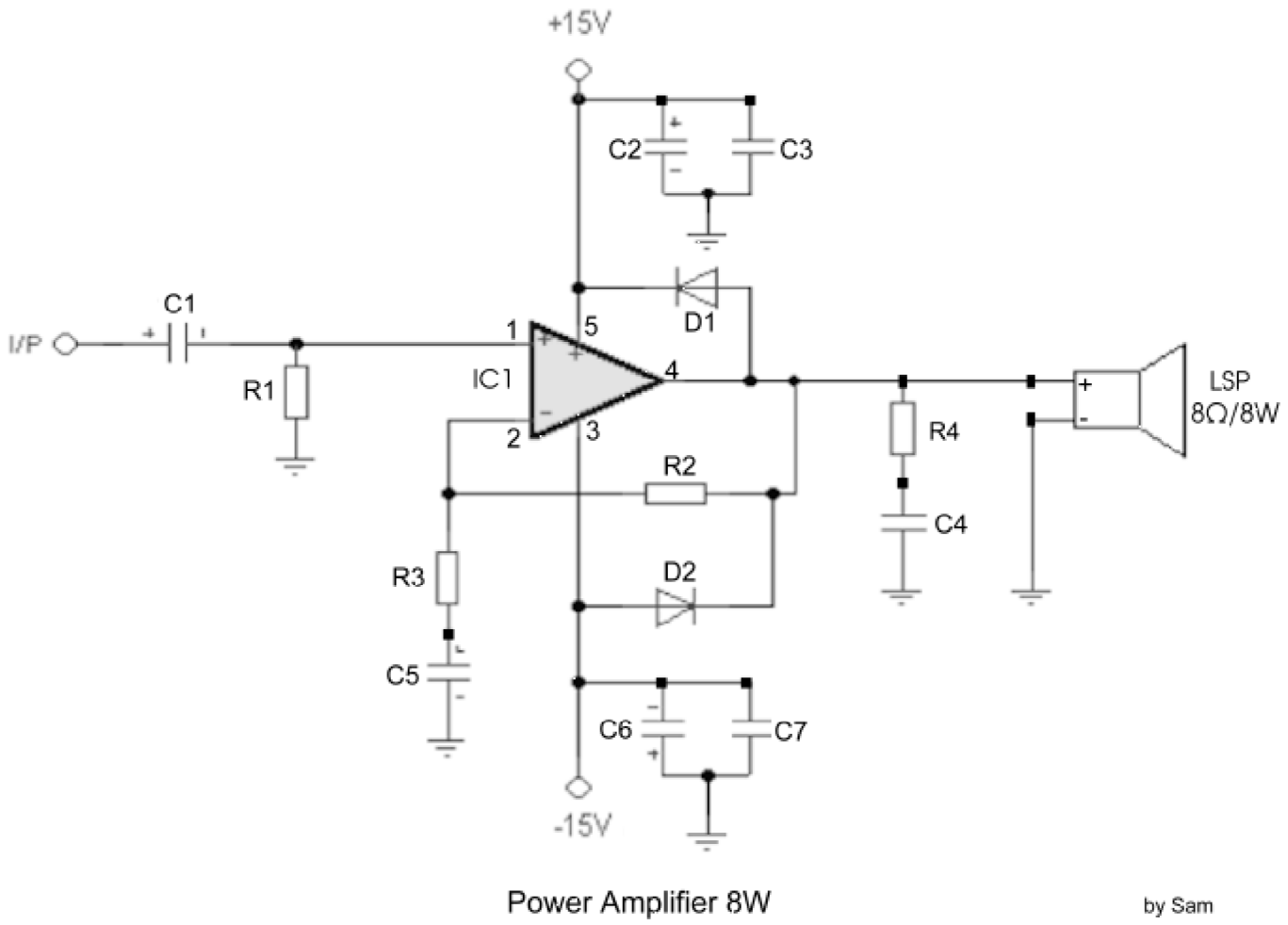

Linh kiện :

R1-2=47ohmK 1/4W	**C1-5=1uF/25V**	**C4=220nF/63V**
R3= 1.5Kohm 1/4W	**C2-6=100uF/25V**	**D1-2=1N4001**
R4=1.2ohm /1W	**C3-7=100nF/63V**	**IC1=TDA 2030**

: Khuyếch đại âm thanh 12W dùng FET

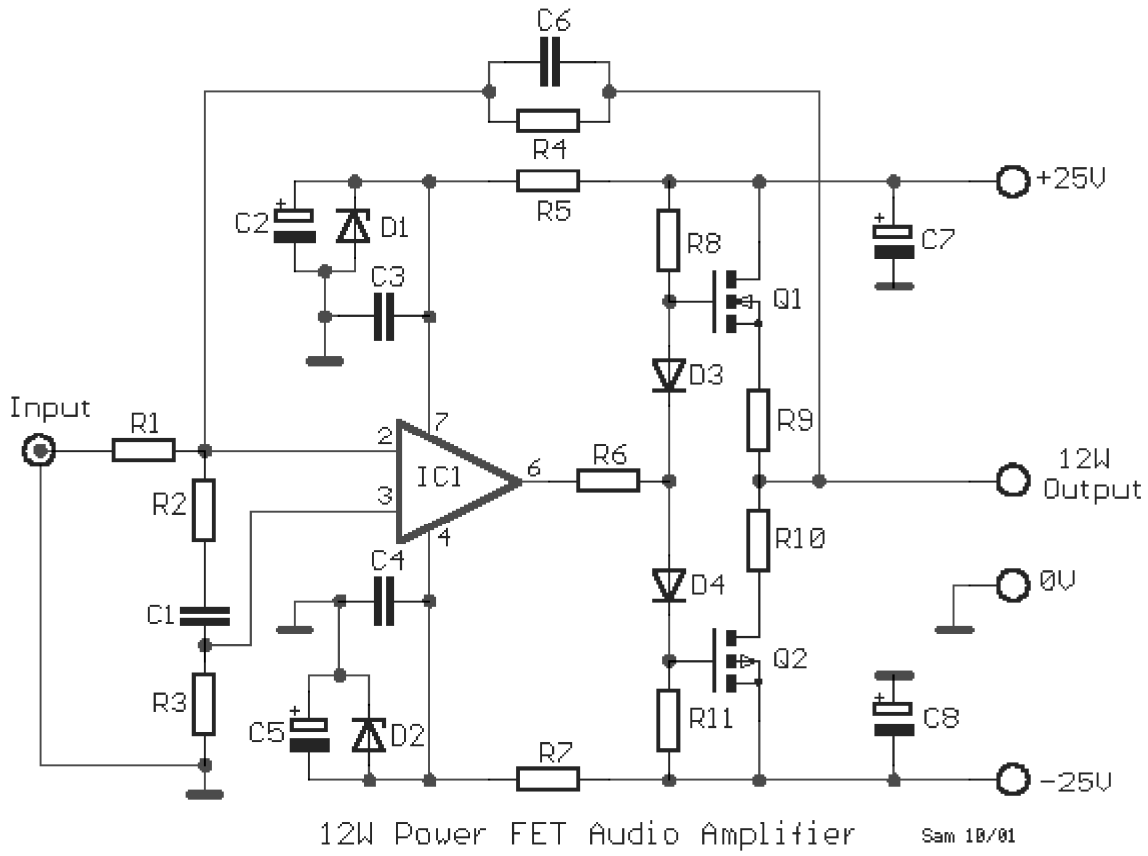

Output Power	**12W in 8Ω (max)**	
	Input sensivity	**3.2V rms (max)**
	T.H.D	**0.002% (1KHZ)**
	Tần số	**DC - 100 KHZ (-3dB**

Linh kiện :

R1= 33Kohm	**R8-11= 10Kohm**	**C7-8= 100uF 40V**
R2= 6.8Kohm	**R9-10= 0.47ohm 2W**	**D1-2= 18V 0.5W zener**
R3= 22Kohm	**C1= 1nF 63V**	**D3-4= 1N4148**
R4= 100Kohm	**C2-5= 47uF 40V**	**IC1= NE5534**
R5-7= 1Kohm	**C3-4= 100nF 63V**	**Q1= 2SK135**
R6= 330ohm	**C6= 4.7pF ceramic**	**Q2= 2SJ50**

: Tập hợp mạch khuyếch đại công suất âm thanh cầu.

Mạch 1 :

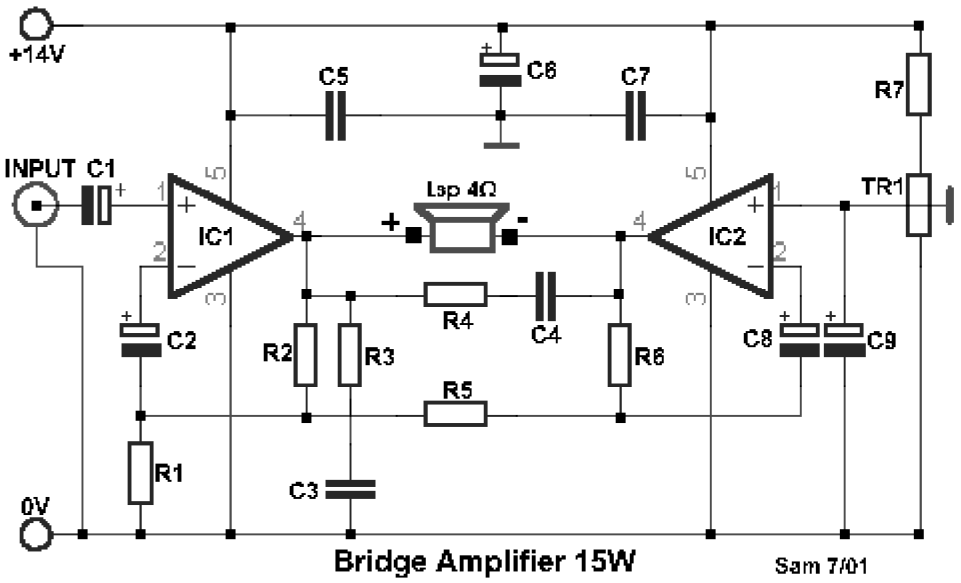

R1-5=2.7ohms	**R7=1Mohms**	**C6=470uF 25V**
R2=100ohms	**C1-9=10uF 16V**	**IC1-2=TDA2002**
R3-4=2.2ohms	**C2-8=220uF 16V**	**TR1=100Kohms trimmer**
R6=220ohms	**C3-4-5-7=100nF 63V**	**Lsp=4....8ohms/40W Loundspeaker**

Mạch 2 :

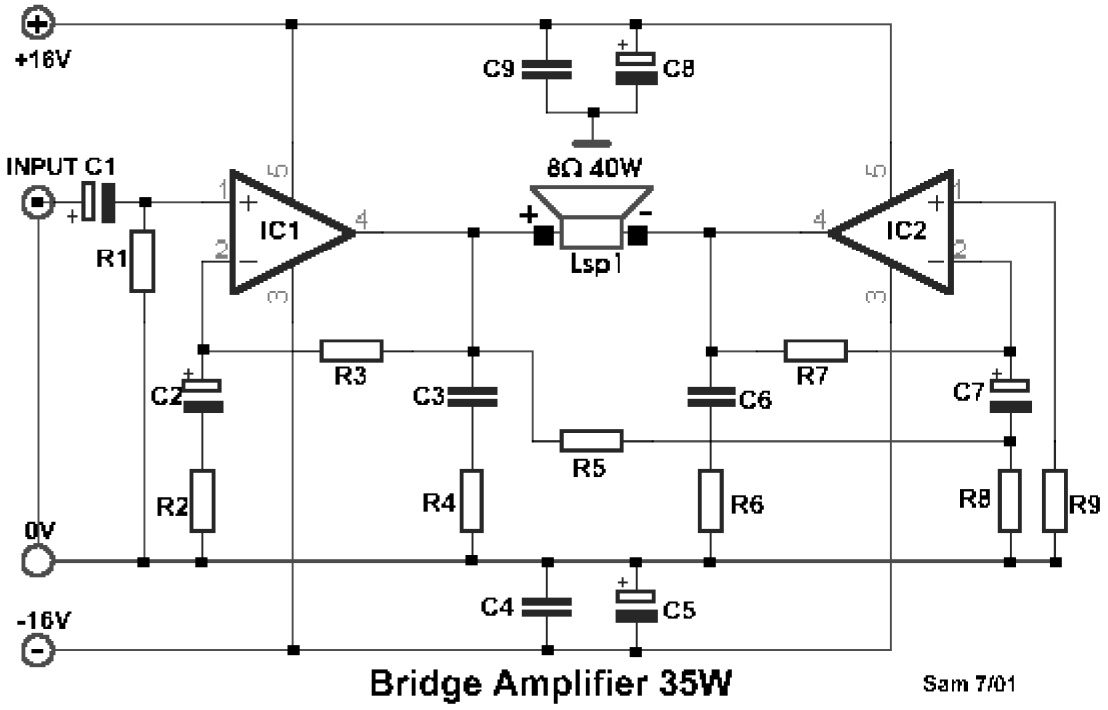

R1-3-5-7-9=22Kohms	**C2-7=22uF 16V**	**IC1-2=TDA2030 --LM1875**
R2-8=680ohms	**C3-6=220nF 100V**	**Lsp=8ohms/ 60W Loudspeaker**
R4-6=1ohm	**C4-9=100nF 100V**	
C1=4.7uF 16V	**C5-8=200uF 25V**	

Mạch 3 :

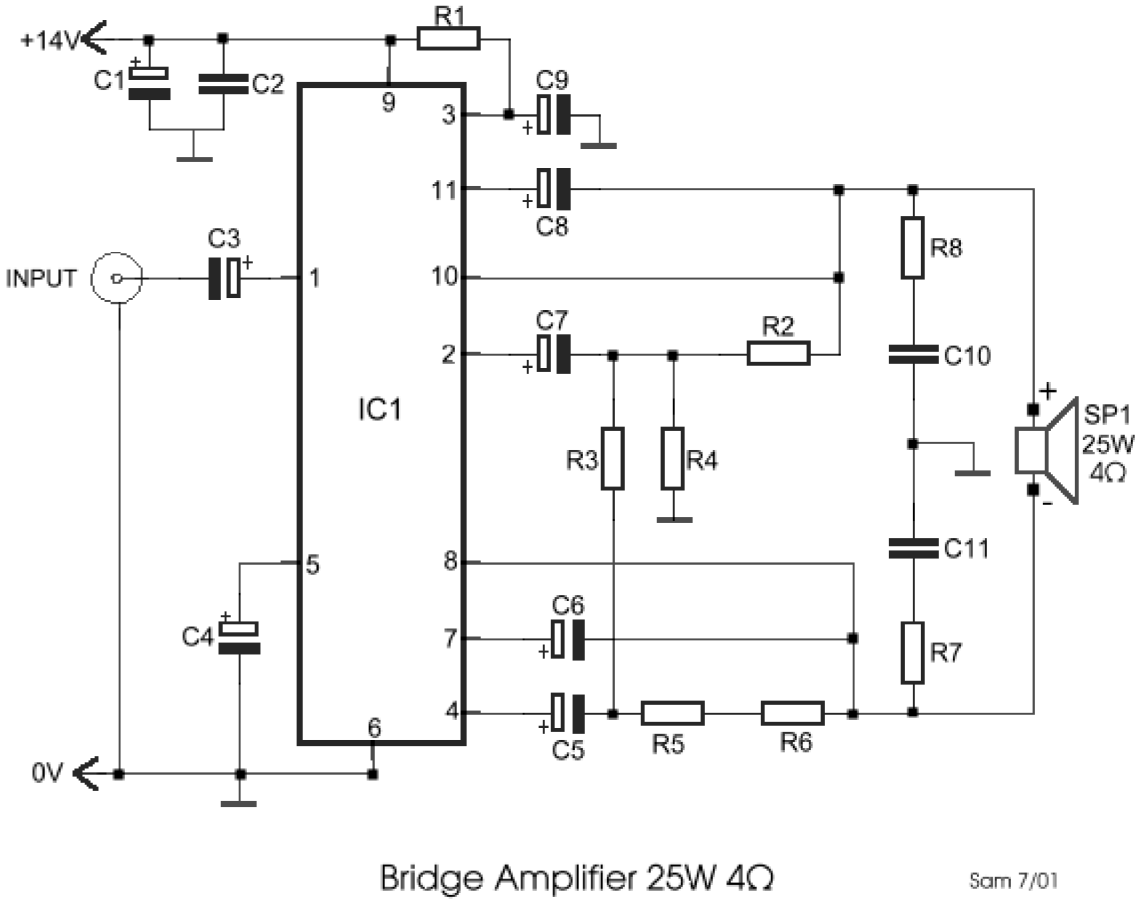

R1=120Kohms	**C1-5-7=220uF 25V**	**C9=10uF 25V**
R2-5-6=1Kohms	**C2-10-11=100nF 100V**	**IC1=LM2005M....TDA2005**
R3-4=12 ohms	**C3-4=2.2uF 25V**	
R7-8=1 ohm		

Mạch 4 :

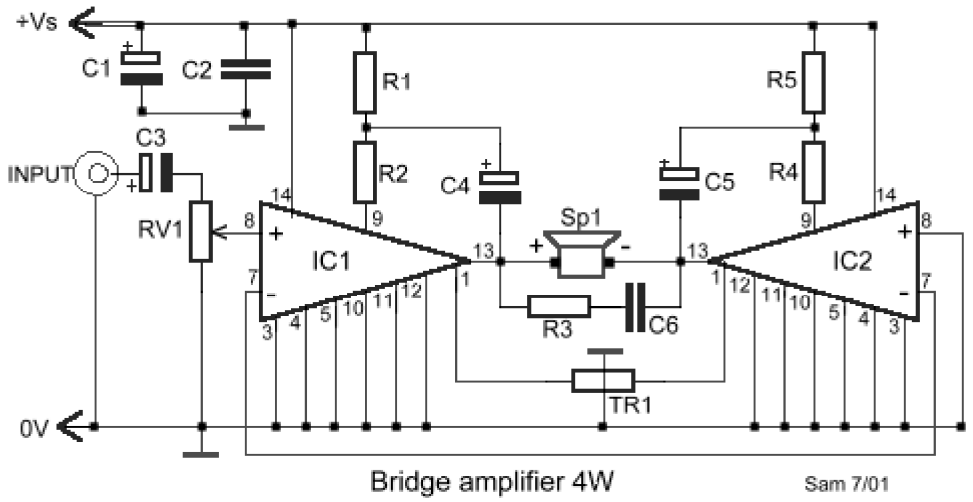

R1-2-4-5=270ohms	**C1=100uF 25V**	**C6=47nF 100V**
R3=2.7ohms	**C2=100nF 100V**	**IC1-2= LM388**
VR1=10Kohms Log. Pot.	**C3=10uF 25V**	
TR1=470Kohms Trimmer	**C4-5=22uF 25V**	

: Bộ chỉ báo quá tải

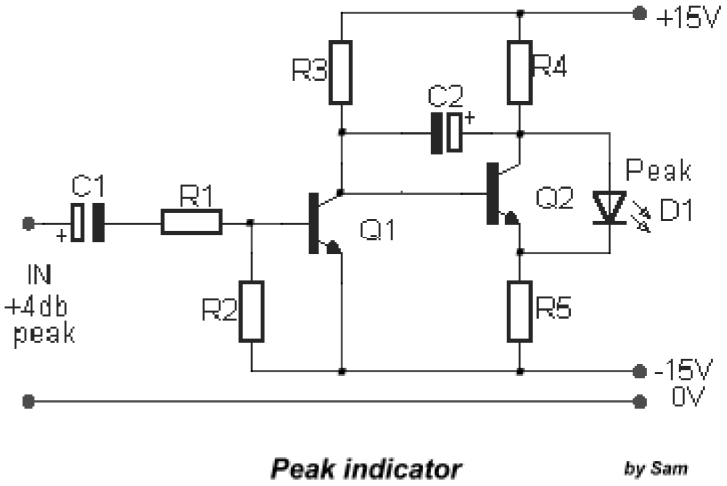

R1= 10Kohm	C1= 47uF 25V
R2= 1.2Kohm	C2= 2.2uF 25V
R3= 220Kohm	Q1-2= BC550C
R4-5= 4.7Kohm	D1= LED RED

: Bộ chuyển đổi cầu Mono và Steroo

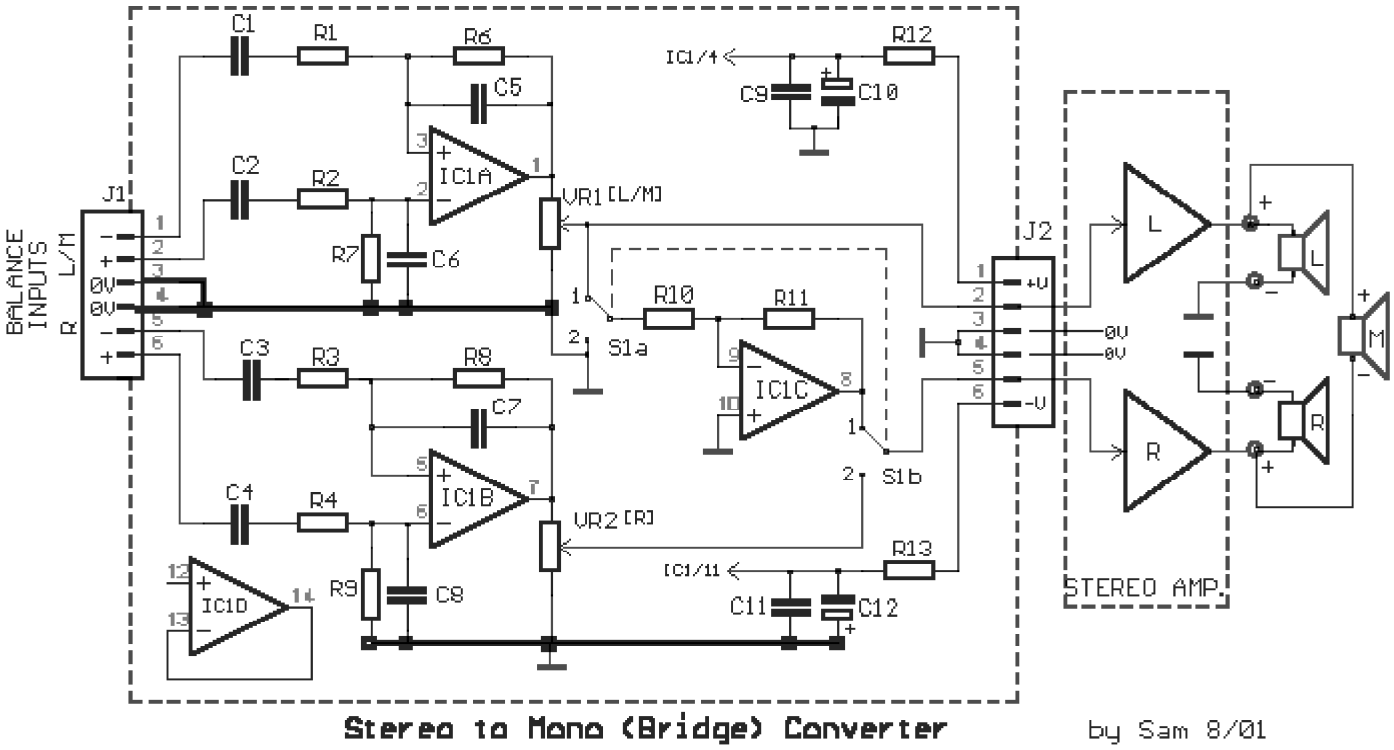

R1-2= 47Kohms	C1-2= 1uF 100V 5%	IC1= TL074
R3-4= 47Kohms	C3-4= 1uF 100V 5%	S1= 2X2 SW.

R5-6= 47Kohms	**C5-6= 33pF**	**VR1-2= 10Kohms Log. pot.**
R7-8= 47Kohms	**C7-8= 33pF**	**.**
R9-10-11=47Kohms	**C9-11= 100nF 100v**	**.**
R12-13= 22 ohms	**C10-12= 47uF 25V**	**.**
All metal film 1/4W 1%	**J1-2= 6pin Connector**	

SƯU TẬP BỞI

DINHHUNG_DTVT88